# RV

## Standard/ Low Power Solenoid Valve (3/2)

Only 1,2,3 series single control

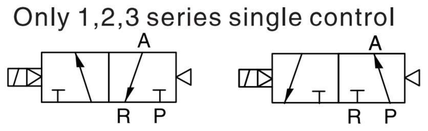


Only 4 series single control

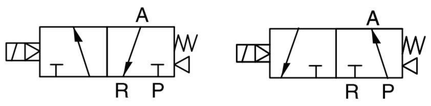


Double control

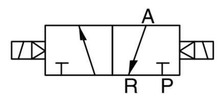


## How to Order?

Low Power Solenoid Valve

Series | Valve body size | ID code | Positions | Ways | Controls | Original Status — Port Size | Reset Type | Voltage | Connection Mode | Cover Color | Acting Type — Patchcord — Thread Type

N

1: 1Series
2: 2Series
3: 3Series
4: 4Series

R: Standard armature + Engergy saving coil

2: positions

3: 3 ways

1: Single control
2: Double control

Blank: Normal close
H: Normal open

M5: M5
06: 1/8"
08: 1/4"
10: 3/8"
15: 1/2"

Blank: Spring (4 series single control only)
Q:Air (1,2,3 series single control)

E1: AC110V
E2: AC220V
E4: DC24V (for 1series, only DC24V available )

Blank: DIN connector type
L: Plug–in Type
K: Water proof connector type (only for 2,3,4 series)

Blank: Brown translucent
J: Colorless and translucent
B: Black (Only black color availale for water proof connector)

Blank: Internal pilot
WB: External pilot

Blank:Patchcord length is 0.3 meter
0.6M:Patchcord length is 0.6 meter
1M:Patchcord length is 1 meter
(Options for "L:Plug–in type" Only)

Blank: G
P: PT
T: NPT

Order Example:

RV series engergy saving solenoid valve, 2 series valve body size, 3/2 ways, double control, 1/8" port size, AC220V, DIN connector, G thread, ERP code is :N2R232–06E2

## Specifications

| Model No. | N1R231–M5<br>N1R232–M5 | N1R231–06<br>N1R232–06 | N2R231–06<br>N2R232–06 | N2R231–08<br>N2R232–08 | N3R231–08<br>N3R232–08 | N3R231–10<br>N3R232–10 | N4R231–10<br>N4R232–10 | N4R231–15<br>N4R232–15 |
|---|---|---|---|---|---|---|---|---|
| Port size | M5 | G1/8 | G1/8 | G1/4 | G1/4 | G3/8 | G3/8 | G1/2 |
| Sectional area(mm) | 5.5(CV=0.31) | 12(CV=0.67) | 14(CV=0.78) | 16(CV=0.89) | 25(CV=1.40) | 30(CV=1.68) | 50(CV=2.79) | 50(CV=2.79) |
| Working medium | Clean air(After 40 μ m filteration ) | | | | | | | |
| Acting type | Internal pilot type/External pilot type | | | | | | | |
| Reset type | Air reset | | | | | | Spring reset /Air reset | |
| Lubrication | Not required | | | | | | | |
| Working pressure(MPa) | 0.15~0.8 | | | | | | | |
| Guaranteed pressur(MPa) | 1.2 | | | | | | | |
| Working temperature(℃) | –20~70(No freezing) | | | | | | | |
| Voltage range | –15%~10% | | | | | | | |
| Power consumption | DC24V:0.6W | | DC24V:0.7W AC220V:0.9VA AC110V:1.4VA | | | | | |
| Insulation class | Class F | | | | | | | |
| Protective class | IP65(DIN40050) | | | | | | | |
| Max. acting frequency | 5 Cycles/s | | | | | | | |
| Activate time(S) | <0.05 | | | | | | | |
| Weight(g) | N1R231: 102<br>N1R232: 169 | | N2R231: 107<br>N2R232: 303 | | N3R231: 260<br>N3R232: 370 | | N4R231: 443<br>N4R232: 569 | |

Note: Normal open is same as normal close.

## ◎ How to Order?

Standard Solenoid Valve

Series No. | Ways | Positions | Valve Body ID Code | Controls | Original Status — Port Size | Reset Type | Voltage | Connection Mode | Cover Color | Valve Color — Patchcord — Thread Type

- Series No.: RV
- Ways: 3: 3 ways
- Positions: 2: 2 positions
- Valve Body ID Code: 1: 1Series; 2: 2Series; 3: 3Series; 4: 4Series
- Controls: 1: Single control; 2: Double control
- Original Status: Blank: Normal close; H: Normal open
- Port Size: M5: M5; 06: 1/8"; 08: 1/4"; 10: 3/8"; 15: 1/2"
- Reset Type: Blank: Spring (Only 4 series single control); Q: Air (1,2,3 series single control)
- Voltage:

| | |
|---|---|
| E1: AC110V | E6: AC36V |
| E2: AC220V | E7: AC24V |
| E3: AC380V | E8: DC110V |
| E4: DC24V | E9: DC48V |
| E5: DC12V | E10: DC36V |

- Connection Mode: Blank: DIN connector; L: Plug–in Type; F: Flying leads; K: Waterproof DIN connector ( Only 2、3、4 series is opitional for K/M )
- Cover Color: Blank: Brown translucent; J: Colorless and translucent; B: Black (Only Waterproof DIN connector)
- Valve Color: Blank: Internal pilot; WB: External pilot
- Patchcord: Blank:Patchcord length is 0.3 meter; 0.6M:Patchcord length is 0.6 meter; 1M:Patchcord length is 1 meter (Options for "L:Plug–in type" and "F:Flying leads type" Only)
- Thread Type: Blank: G; P: PT; T: NPT

Order Example:

RV series solenoid valve, 2 series valve body size, 3/2 ways, single control, 1/8" port size, air return, standard coil, AC220V, DIN connector, G thread, ERP code is :RV3221–06QE2

## ◎ Specifications

| Model No. | RV3211–M5<br>RV3212–M5 | RV3211–06<br>RV3212–06 | RV3221–06<br>RV3222–06 | RV3221–08<br>RV3222–08 | RV3231–08<br>RV3232–08 | RV3231–10<br>RV3232–10 | RV3241–10<br>RV3242–10 | RV3241–15<br>RV3242–15 |
|---|---|---|---|---|---|---|---|---|
| Port size | M5 | G1/8 | G1/8 | G1/4 | G1/4 | G3/8 | G3/8 | G1/2 |
| Sectional area(mm) | 2 way:5.5(CV=0.31) | 2 way:12(CV=0.67) | 2 way:14(CV=0.78) | 2 way:16(CV=0.89) | 2 way:25(CV=1.40) | 2 way:30(CV=1.68) | 2 way:50(CV=2.79) | 2 way:50(CV=2.79) |
| Working medium | Clean air(After 40 μm filteration ) | | | | | | | |
| Acting type | Internal pilot type/External pilot type | | | | | | | |
| Reset type | Air reset | | | | | | Spring reset /Air reset | |
| Lubrication | Not required | | | | | | | |
| Working pressure(MPa) | 0.15~0.8 | | | | | | | |
| Guaranteed pressur(MPa) | 1.2 | | | | | | | |
| Working temperature(℃) | –20~70(No freezing) | | | | | | | |
| Voltage range | –15%~10% | | | | | | | |
| Power consumption | DC:2.8W ; AC:3.0VA | | DC:3.0W ; AC:4.0VA | | | | | |
| Insulation class | Class F | | | | | | | |
| Protective class | IP65(DIN40050) | | | | | | | |
| Max. acting frequency | 5 Cycles/s | | | | | | | |
| Activate time(S) | <0.05 | | | | | | | |
| Weight(g) | RV3211: 102<br>RV3212: 169 | | RV3221: 107<br>RV3222: 303 | | RV3231: 260<br>RV3232: 370 | | RV3241: 443<br>RV3242: 569 | |

## ◎ Flow Chat

N1R231–M5、RV3211–M5

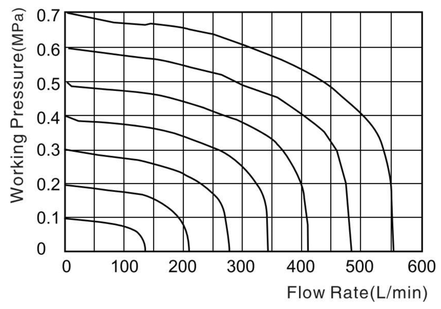


N1R231–06、RV3211–06

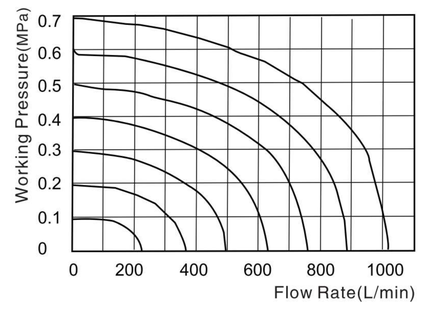


N2R231–06、RV3221–06

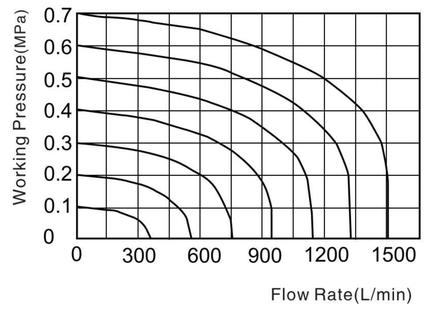


N3R231–08、RV3231–08

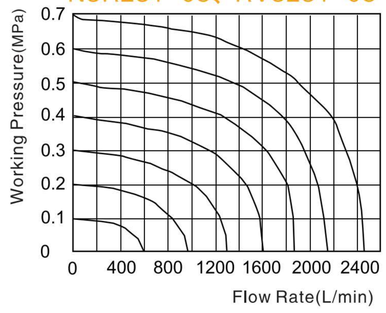


N2R231–08、RV3221–08

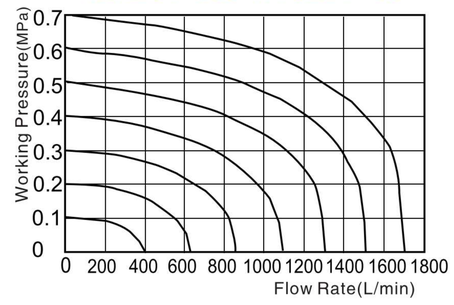


N3R231–10、RV3231–10

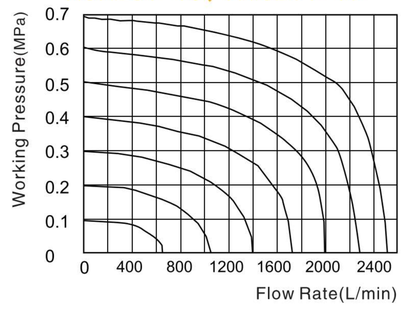


N4R231–10、RV3241–10
N4R231–15、RV3241–15

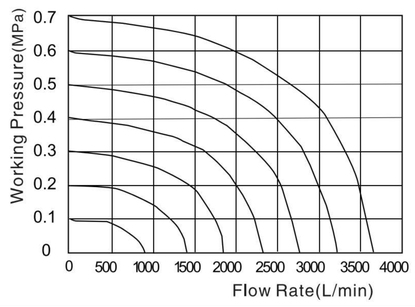

## ◎ Internal Structure

Single Solenoid Valve(Normal close)

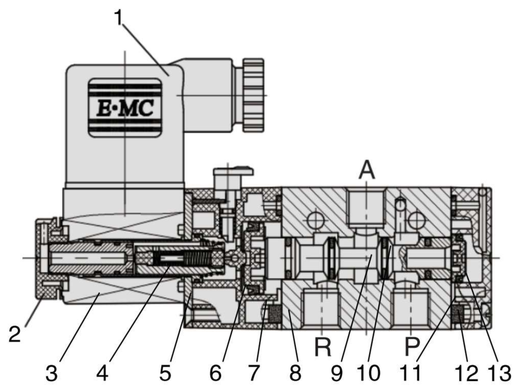


Single Solenoid Valve(Normal open)

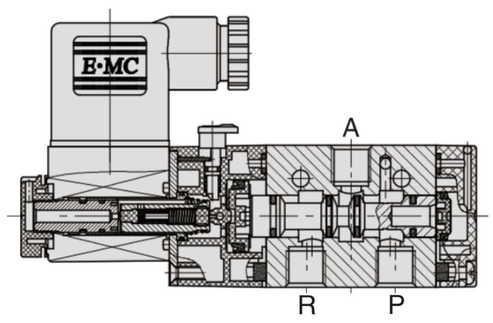


| No. | Part Name | Material |
|---|---|---|
| 1 | Connector | Engineered plastics |
| 2 | Nut | POM |
| 3 | Coil | Cu+ Thermosetting resin |
| 4 | Pilot units | Pure iron + copper + stainless steel |
| 5 | Plate | Carton steel |
| 6 | Piston | POM |
| 7 | Pilot seat | Engineered plastics |
| 8 | Valve body | Aluminum alloy |
| 9 | Spool | Aluminum alloy |
| 10 | O–ring | NBR |
| 11 | Rear cover | Engineered plastics |
| 12 | Filter | Synthetic material |
| 13 | Piston | Engineered plastics |
| 14 | Manual button | Engineered plastics |

Double solenoid valve(Normal close)

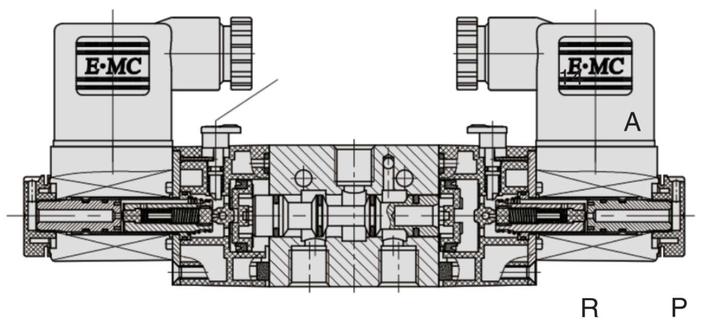


## ◎ Main Dimension

### Single Solenoid Valve

DIN Type

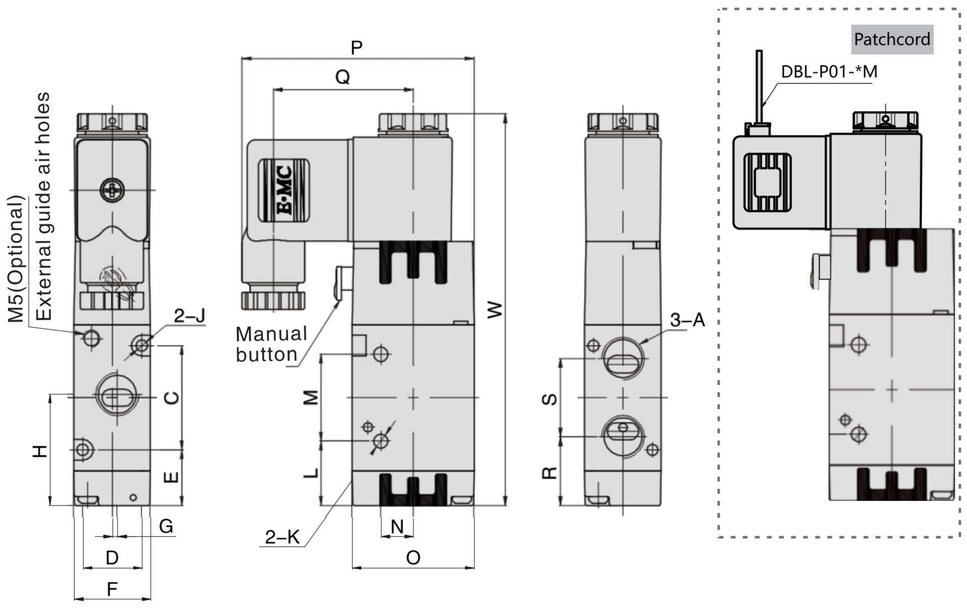


Flying Leads Type

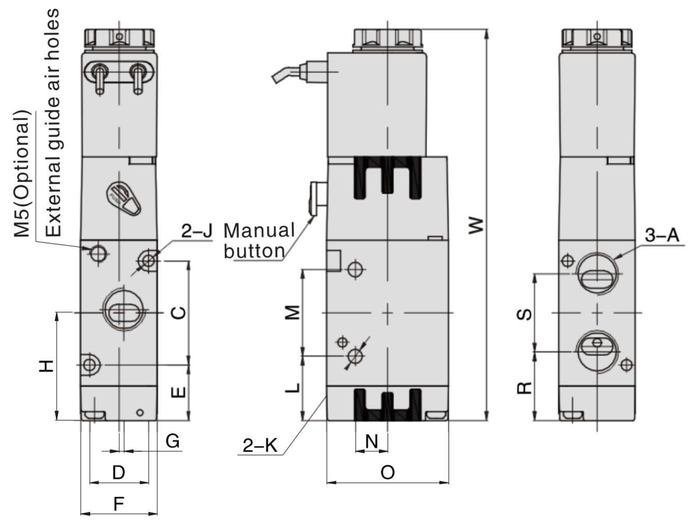


### Double Solenoid Valve

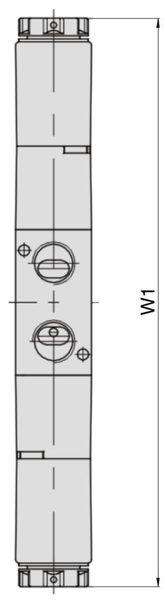


(mm)

| Model/Sign | A | C | D | E | F | G | H | J | K | L | M | N | O | P | Q | R | S | W | W1* |
|---|---|---|---|---|---|---|---|---|---|---|---|---|---|---|---|---|---|---|---|
| RV3211–M5 | M5 | 19 | 13 | 16.5 | 18 | 0 | 26 | 3.3 | 3.1 | 15.5 | 21 | 6 | 27 | 55.2 | 33.9 | 18.9 | 14.2 | 92.1 | 132.2 |
| RV3211–06 | G1/8 | 19 | 13 | 16.5 | 18 | 1.5 | 27 | 3.3 | 3.1 | 15.5 | 21 | 6 | 27 | 55.2 | 33.9 | 18 | 16 | 92.1 | 132.2 |
| RV3221–06 | G1/8 | 30 | 17 | 16 | 22 | 0 | 31 | 3.3 | 4.2 | 18.5 | 25 | 9.3 | 35 | 66.7 | 40.2 | 20 | 22 | 112.7 | 163.4 |
| RV3221–08 | G1/4 | 30 | 17 | 16 | 22 | 1.5 | 32 | 3.3 | 4.2 | 18.5 | 25 | 9.3 | 35 | 66.7 | 40.2 | 19.8 | 22.5 | 112.7 | 163.4 |
| RV3231–08 | G1/4 | 35 | 20 | 19.1 | 27 | 0 | 36.6 | 4.3 | 4.3 | 21.6 | 30 | 9.5 | 40 | 69.2 | 40.2 | 24.6 | 24 | 124.3 | 175.4 |
| RV3231–10 | G3/8 | 35 | 20 | 19.1 | 27 | 2 | 36.6 | 4.3 | 4.3 | 21.6 | 30 | 9.5 | 40 | 69.2 | 40.2 | 24.6 | 24 | 124.3 | 175.4 |
| RV3241–10 | G3/8 | 40.5 | 27 | 24.8 | 34 | 0 | 45 | 4.3 | 5.2 | 21 | 48 | 11.5 | 50 | 74.2 | 40.2 | 29.3 | 31.5 | 144.7 | 199.4 |
| RV3241–15 | G1/2 | 40.5 | 27 | 24.8 | 34 | 2 | 45 | 4.3 | 5.2 | 21 | 48 | 11.5 | 50 | 74.2 | 40.2 | 29.3 | 31.5 | 144.7 | 199.4 |

Note: The dimension of NR series and RV series are same, The dimension of normal open type and normal close type are same,
W1*is the dimension of double control solenoid valve.