ETV3000/4000

Electro-Pneumatic Proportional Regulator

Product Features

- Adopt 32–bits CPU，special closed–loop control algorithm to realize the rapid response and precise control effectively;
- Control precision is ≤ ±0.5%;
- Adopt high–precision built–in pressure sensor to improve control precision effectively;
- Three–color digital display LCD, real–time display actual pressure and setting pressure simultaneously , convenient to confirm and adjust on site;
- Easy to change 4 pressure units(Mpa,Bar,Psi,Kpa)at any time;
- Self–diagnosis;
- Error indication failure alarm;
- 4–pins M12A standard (male) fieldbus connector;
- Easy assembling and operating;
- The built–in filter can be easily removed for cleaning or replacement;
- The valve body made by microdiecast technology;
- Large flow rate;
- Protection class IP65;

How to order?

Series No.	Valve body size	Port size	Pressure range	Input signal	Monitor output	Port size	Bracket	Cable connector type
ETV:ETV series Electro–Pneumatic proportional regulator	3000：3000 Series 4000：4000 Series	02:1/4" 03:3/8" 03:3/8" 04:1/2"	30：0–0.5MPa/0–5bar/ 0–72psi/0–500KPa 50：0–0.9MPa/0–9bar/ 0–130psi/0–900KPa	0：4–20mA 3：0–10V 0：4–20mA 3：0–10V	1：1–5V 4：4–20mA 1：1–5V 1：1–5V 4：4–20mA 1：1–5V 2：24V NPN 3：24V PNP	Blank: G P: PT T: NPT	Blank: Without bracket B: Flat bracket C: L– bracket	Blank: Without cable connector L: Right angle type 2m S: Straight type 2m

Order Example: ETV series Electro–Pneumatic Proportional Regulator, valve body3000, port size1/4”,output pressure 0–0.9MPa,input signa 0–10V, Monitor output1–5V,port size G,Flat bracket,straight type 2m, ERP code is: ETV3000–025031–BS。

ETV Series Assessories Order Code

Cable connector Name	Order code
4–pins M12A standard Straight type 2m	M124R–PVC–2M
4–pins M12A standard Right angle type 2m	M124RL–PVC–2M

Bracket Name	Order code
Flat bracket	FJ–ETV–FA
L– bracket	FJ–ETV–LB

Note: Normal cable connector length is 2m,any other model need to be customized production,max length 10m.

Characteristic Parameters Curve

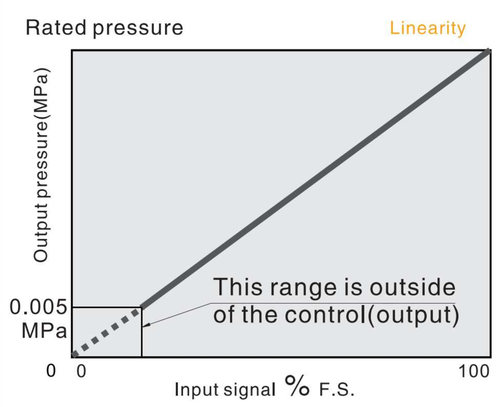

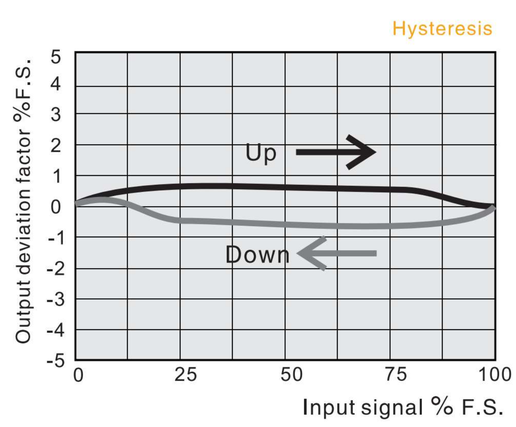

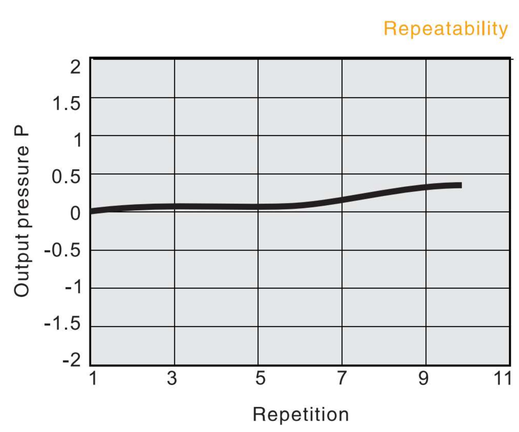

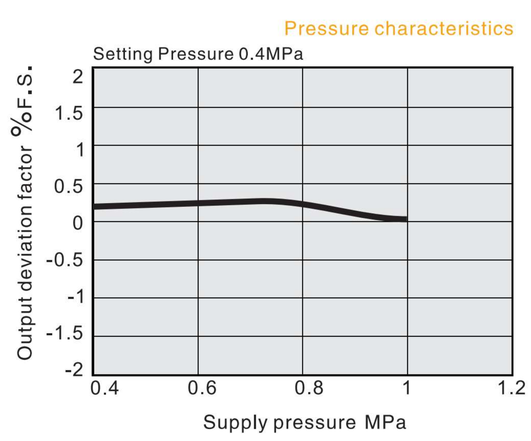

E·MC®

Specifications

Model	ETV3000-02	ETV3000-03	ETV4000-03	ETV4000-04
Port size	G1/4	G3/8	G3/8	G1/2
Flow rate (Cv)	1.5	2.0	2.5	3
Pressure range	0–0.9MPa			
Input signal	0–10V or 0–5V or 4–20mA(sink)			
Monitor output	4–20mA(sink) / 1–5V			
Connector type	4–pins M12A standard(Male)			
Supply Voltage	DC24V ± 10%			
Power	≤3W			
Enclosure	IP65 (DIN40050)			
Working temperature	0–50℃			
Working medium	Clear air(After 5μm filtration)			
LCD display	Set pressure and actual pressure display at the same time			
Valve body	Aluminium alloy			
Installation position	Random direction			
Max input pressure	1.0MPa			
Min input pressure	bigger than max output pressure by 0.1Mpa			
Accuracy	≤ ± 0.5%			
Linearity	≤1.0%F.S.			
Repeatability	≤ ± 0.5%F.S.			
Hysteresis	≤0.5%F.S.			

Wiring

Definition		Electrical connection
PIN number	Cable color	Analog input type
PIN1	Brown	+24VDC
PIN2	White	Positive pole of control singa
PIN3	Blue	Negative pole of power
PIN4	Black	Monitor singal

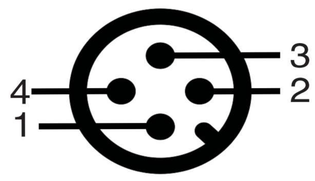

Button & LCD Screen

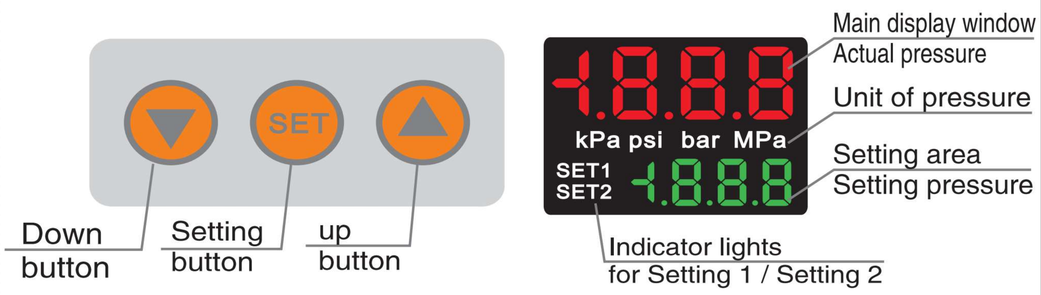

Main Dimension

ETV3000

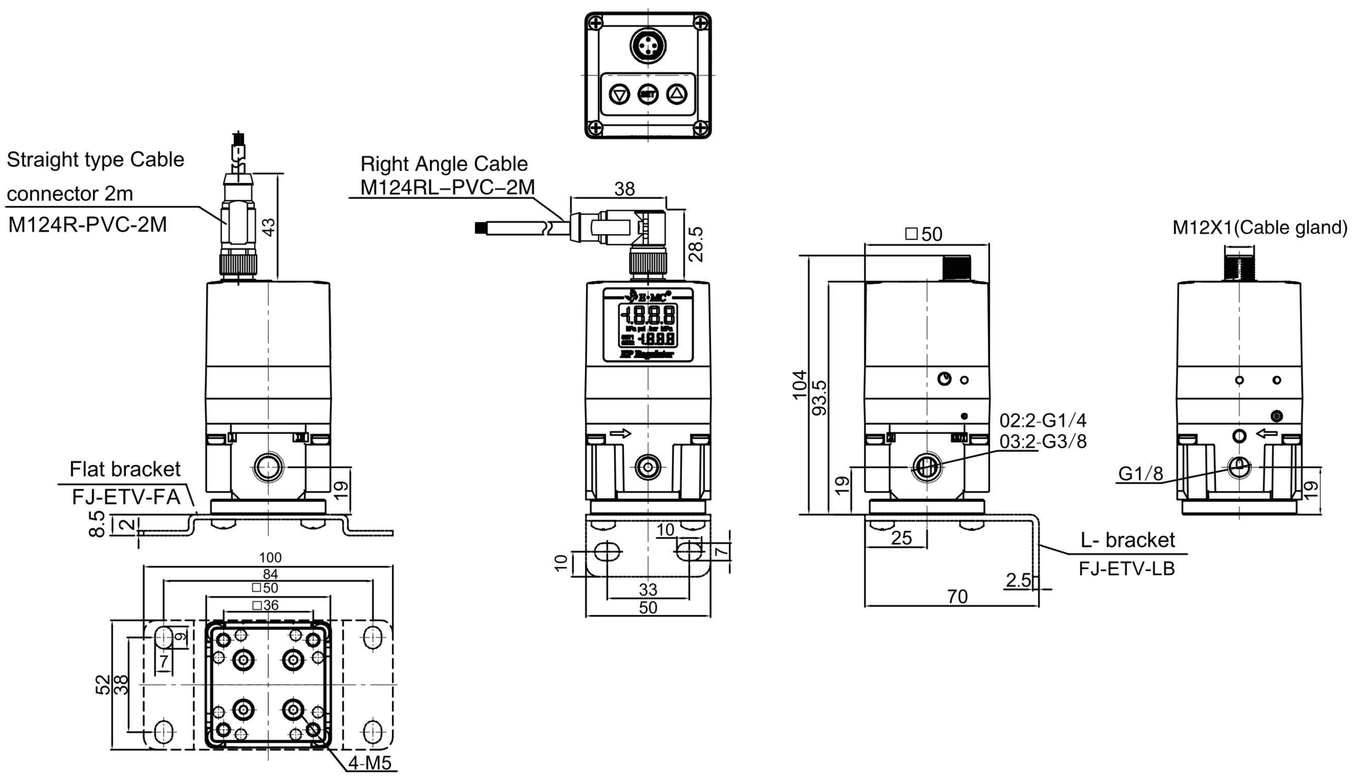
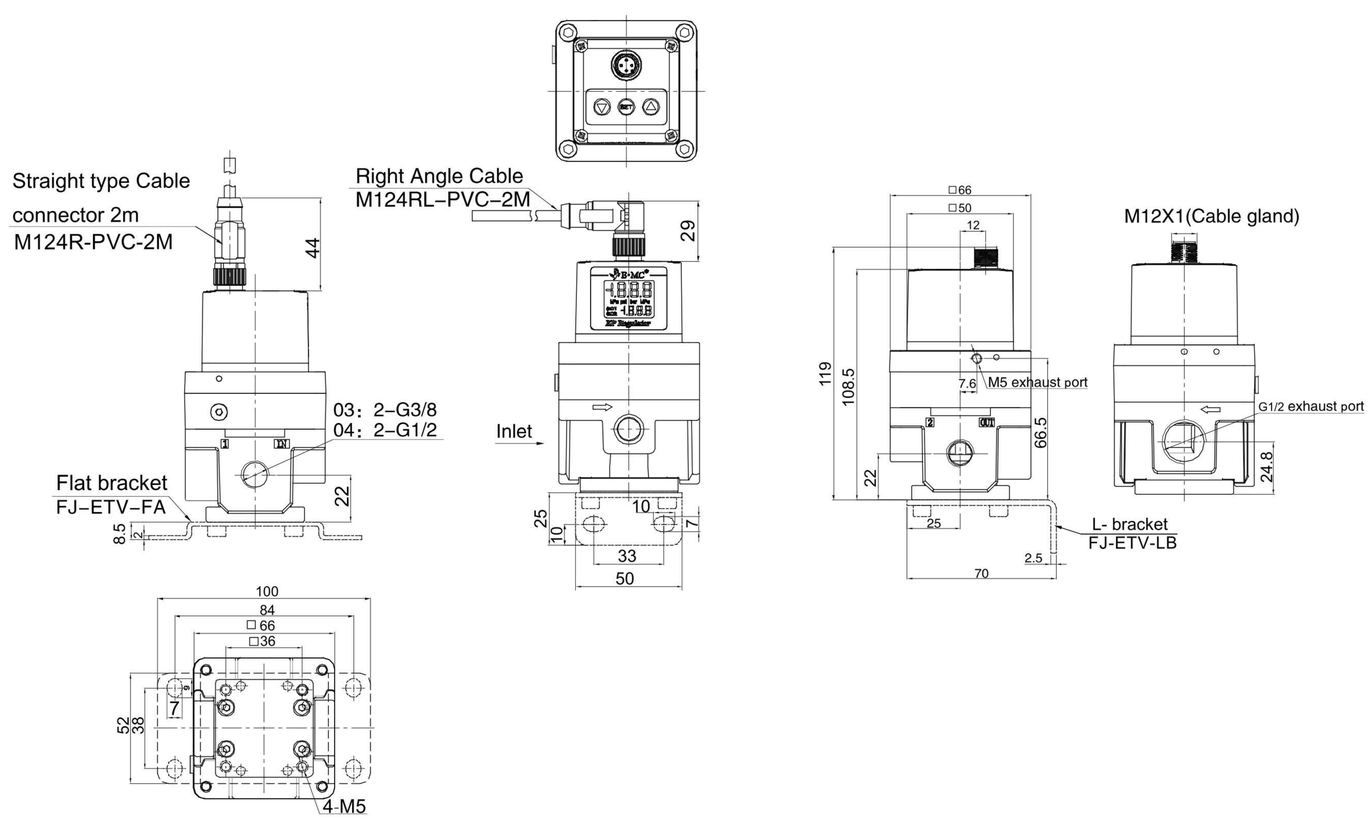
ETV4000