IMO

AC Variable Speed Inverter Drives Range

0.4kW - 500kW (0.5HP - 670HP)

Introducing the latest family of high performance

AC Variable Speed Inverter Drives from IMO

SD1 HD2 HD2IP

Continuing The Legacy

Since the early 1980's, IMO has been at the forefront of AC Variable Speed Inverter Drive manufacturing technology, and our latest family of high performing inverters are no different. Each series whilst differing from each other is comprehensively specified and are packed full of a huge range of enhanced features to suit virtually every industrial, commercial or domestic application. From the entry-level SD1 series to the IP55 rated high-protection, multi-function HD2IP, every model in every series offers exceptional reliability and performance, and sets the bar high for others to compete with.

High Performance At Low Speeds

IMO is renowned for manufacturing market-leading variable speed drives and the market-leading Jaguar range has been long established with high-end features such as torque vector control. Our latest family of variable speed drives heralds a new era in feature rich inverter drives due to the vast array of standard features that you would normally expect only to find in considerably more advanced models.

The SD1 series offers torque vector control across all models in the range, enabling them to deliver stable torque output even at low speeds. This control allows the SD1 to be used in a wide range of applications including lifts and conveyor systems, and high-inertia loads that demand a higher starting torque.

The HD2 offers the most advanced vector control technology which provides exceptional speed response and control, along with offering unparalleled reliability, precision and stability. Additional advantages to the customer include the huge range of communication protocols along with Bluetooth and WiFi communication for programming, as well as Dual Ratings on selected models.

The HD2IP provides most of the same features found in the HD2 series, with the added benefit of being IP55 protection rated, making it ideal for both indoor and outdoor applications. An integrated AC isolator provides convenience and security for machine control and added safety.

Enhanced Control Functionality

As you would expect, a drive from IMO isn't your average run-of-the-mill product. We produce solutions which tick every box, every time, and our latest family of AC Variable Speed Inverter Drives are no different. From offering motor auto-tune which minimises power losses, to PID control which allows motor operation whilst controlling temperature, pressure and flow rate without the use of an external device or controller, together with the inclusion of programmable logic functionality.

Standard control features across the family include:

- Torque Vector control
- Up to 150% starting torque
- IP20 (IP55 for HD2IP)
- High speed processor
- Motor Auto-tune (static and dynamic)
- Safe Torque Off (STO)
- DC Injection braking
- Integral brake chopper
- PID Control as standard
- Integral Modbus RTU / RS485

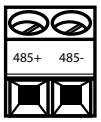

Additional to the above, the HD2 and HD2IP series offer some more enhanced features including:

- Permanent magnet motor control
- Detachable Keypad with copy
- Advanced LCD keypad
- 2 motor parameter sets
- Flux braking
- PLC option card
- PG card (multiple options)
- DCR (18.5kW-110kW)

Safety As Standard

All models within the SD1, HD2 and HD2IP ranges include Safe Torque OFF (STO) as standard. STO is a hugely important safety feature which could prevent industrial accidents and even save lives. But what exactly is STO?

The STO feature ensures that no torque-generating energy is put through the equipment. STO is used to bring the drive to a complete standstill, and also prevents any unexpected or unintentional starting of the motor or drive. It therefore enables safe working when for example, the protective door or cover is open or removed.

The advantage of an integrated STO functionality compared with standard safety solutions using electromechanical switchgear is initially the elimination of multiple components and associated part failure and maintenance, but is also considerably quicker due to a shorter switching time than a conventional solution.

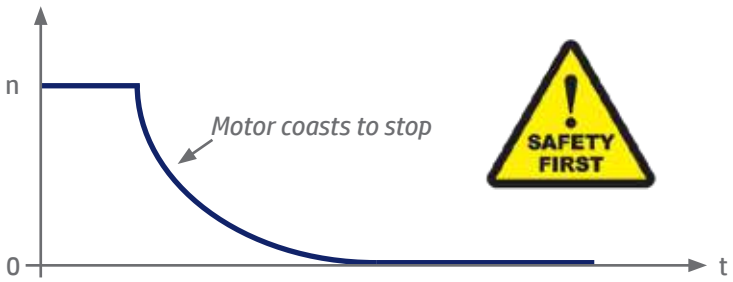

Motor velocity decaying to zero after STO has been activated

Comprehensively specified inverters for AC motors

0.4kW-110kW (0.5HP-150HP)

The SD1 range is the ultimate variable speed drive for you! Easy to set up, and comprehensively specified for use in virtually any application, the SD1 is IMO's first complete range of variable speed drives which offer STO (non-UL approved models only), along with a huge range of enhanced features, normally found on much more advanced inverter drives.

- Single-phase (110VAC) 0.4kW-1.1kW (0.5HP-1.4HP)
- Single-phase (220VAC) 0.4kW-2.2kW (0.5HP-3HP)
- Three-phase (220VAC) 0.4kW-7.5kW (0.5HP-10HP)
- Three-phase (380VAC) 0.75kW-110kW (1HP-150HP)

A range of EMC filter options makes the SD1 suitable for virtually every industrial, commercial or domestic application.

- IP20
- Torque Vector Control
- Optional PM DC Motor Operation
- STO (Safe Torque OFF) - SIL2 / SIL3
- Up to 150% Starting Torque
- Front Mounted RJ45 Socket (≤2.2kW/3HP)
- Din Rail Mountable (≤2.2kW/3HP)
- Fixed Keypad with Potentiometer (≤2.2kW/3HP)
- Detachable Keypad (≥4kW/5.5HP)

- HDI Input (Pulse)
- 1/2 Analogue Inputs
- 1/2 Analogue Outputs
- 2 Output Relays
- Transistor Output
- 4/5 Digital Inputs
- Selectable PNP/NPN I/O

- Integral Modbus-RTU / RS485
- PID Control as Standard
- DC Injection Braking
- Integral Brake Chopper (≤30kW/40HP)
- Motor Auto-tune (Static & Dynamic)
- Internal DC Reactor (≥18.5kW/25HP)

- Conformal Coating as Standard
- Internal C3 Filter (≥4kW/5.5HP)
- Optional C3 Filter (≤2.2kW/3HP)
- Optional C1 & C2 Filter
- CE, UKCA
- RoHS & Reach Compliant
- UL / cUL*2 / TUV
- 2 Year Warranty

* UL/cUL approval up to 11kW. Please check Ratings & Specifications for approved models.

SD1 Features

Multi-function LED display & status

Keypad fitted as standard to SD1 models ≤2.2kW (3HP) and includes 5 digit LED display for quick commissioning and easy use. Removeable keypad on models >2.2kW (3HP)

External keypad connection port

Analogue potentiometer

Connection terminals

Modbus

EMC Filter

[Front View]

Safe Torque OFF (STO)
is standard on all models*

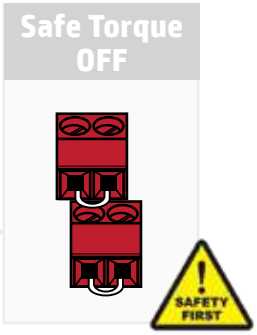

Shielded Barrier Strip
on all models ≤4kW (5.5HP)

* STO available on non-UL approved models only.

[Bottom View]

Fan hatch

NOTE:
0.4kW - 2.2kW (0.5HP - 3HP)
External Filter

4kW - 11kW (5.5HP - 15HP)
Internal Filter

Terminal Layout

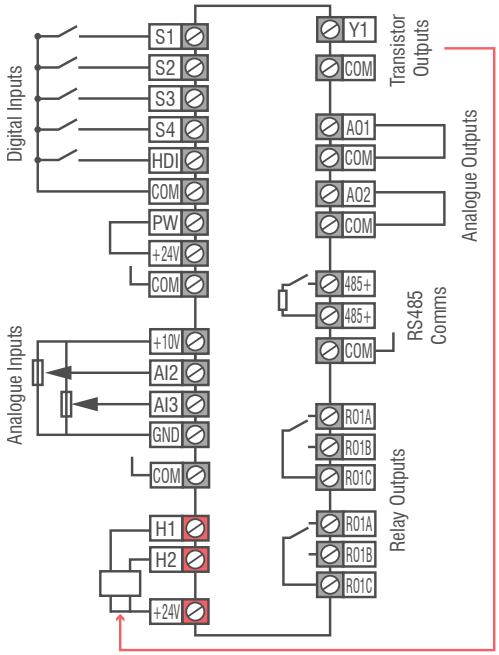

Note: For a more detailed control connections diagram, please refer to the SD1 technical datasheet found at www.imopc.com

Replaceable fan

EMC Filter (optional)

SD1 Application Examples

With the array of advanced features and filter options, the SD1 is suited for use in virtually any application, whether it be industrial, commercial or domestic. The following are examples of, but not limited to, the type of application where the SD1 can be employed:-

Fan Applications	Pump Applications	Conveyor Applications	Hoist Applications
HVAC Water Treatment Plants Automatic Milking Systems	HVAC Waste Water Process Cooling	Mining & Metals Logistics Food Machinery	Elevators & Lifts RTG Cranes Material handling

The versatile and feature-rich SD1 is ideal for hundreds of different applications in all segments of industry

SD1 Technical Specifications

Function Description		Specification
Power Input	Input Voltage (V)	AC 1PH 110V (-15%) to 120V (+10%) AC 1PH 200V (-15%) to 240V (+10%) AC 3PH 200V (-15%) to 240V (+10%) AC 3PH 380V (-15%) to 460V (+10%)
	Input Current (A)	Refer to the rated value
	Input Frequency (Hz)	50Hz/60Hz, allowable range: 47 to 63Hz
Power Output	Output Voltage (V)	0 to Input voltage (SD1-XXA-11 - AC 3ph 230VAC)
	Output Current (A)	Refer to the rated value
	Output Power (kW)	Refer to the rated value
	Output Frequency (Hz)	0 to 400Hz
Technical Control Performance	Control Mode	SVPWM control, SVC
	Motor Type	Asynchronous motor, Permanent magnet motor (optional)
	Speed Regulation Ratio	Asynchronous motor 1:100 (SVC)
	Speed Control Precision	±0.2% (SVC)
	Speed Fluctuation	±0.3% (SVC)
	Torque Response	<20ms (SVC)
	Torque Control Precision	10% (SVC)
	Starting Torque	0.5Hz / 150% (SVC)
	Overload Capacity	150% of rated current: 1 minute; 180% of rated current: 10 seconds; 200% of rated current: 1 second
Running Control Performance	Frequency Setup Mode	Digital, analog, pulse frequency, multi-step speed running, simple PLC, PID, Modbus communication. Shift between the set combination and set channel
	Auto-Adjustment of the Voltage	Automatic voltage regulation. Compensates for supply voltage transients
	Fault Protection Function	Provides comprehensive fault protection functions: Overcurrent; Overvoltage; Undervoltage; Overheating; Phase Loss; Overload etc.
	Speed Tracking Restart	Provides smooth ramping during start up
Peripheral Interface	Analog Input	1 (AI2) 0-10V / 0-20mA and 1 (AI3) -10V to +10V
	Analog Output	2 (AO1, AO2) 0-10V / 0-20mA
	Digital Input	4 standard inputs (max. frequency: 1kHz) 1 high speed inpput (max. frequency: 50kHz)
	Digital Output	1 Y1 terminal output
	Relay Output	2 programmable relay outputs RO1A NO, RO1B NC, RO1C common terminal RO2A NO, RO2B NC, RO2C common terminal Contact capacity: 3A/250VAC
Other	Mounting Method	Wall & rail mounting
	Ambient Operating Temperature	-10°C to +50°C (derating 1% for every additional 1°C when above 40°C)
	DC Reactor	Standard internal DC reactor for inverters (≥18.5kW)
	Installation Mode	Wall and rail installation of inverters (1PH/200V,3PH/380V, ≤2.2kW and 3PH/200V, ≤0.75kW) Wall and flange installation of inverters (3PH/380V, ≥4kW and 3PH/200V, ≥1.5kW
	Braking Unit	Standard for inverters ≤37kW, optional for inverters of 45 to110kW
	Protection Level	IP20 Note: Plastic cased inverter should be installed in a metal distribution cabinet, which conforms to IP20 (top surface conforms to IP3X)
	Cooling	Fan cooling
	Braking Unit	Built-in
	EMC Filter	Internal C3 filters for inverters 3PH/380V, ≥4kW and 3PH/200V, ≥1.5kW. Optional external filters to meet the requirement of IEC61800-3 C2, IEC61800-3 C3 For drives >4kW, if internal C3 filter is required, fit supplied jumper link to EMC/J10 observing all safety precautions
	Safety	All SD1 inverters comply to safety standards and are marked accordingly. STO function to SIL level 2/3

SD1 Ratings & Specifications

Single Phase 110VAC (Output Voltage - 230VAC)					
Model	Frame Size	Output Power		Input Current	Output Current
SD1-2.5A-11	2	0.4kW	0.5HP	8.1A	2.5A
SD1-4.2A-11	2	0.75kW	1.0HP	15.1A	4.2A
SD1-5.8A-11	2	1.1kW	1.4HP	20.0A	5.8A

NOTE: 110VAC models do not include STO and output voltage is 230V.

Single Phase 220VAC					
Model	Frame Size	Output Power		Input Current	Output Current
SD1-2.5A-21	1	0.4kW	0.5HP	6.5A	2.5A
SD1-4.2A-21	1	0.75kW	1.0HP	9.3A	4.2A
SD1-7.5A-21	2	1.5kW	2.0HP	15.7A	7.5A
SD1-10A-21	2	2.2kW	3.0HP	24.0A	10.0A

Three Phase 220VAC					
Model	Frame Size	Output Power		Input Current	Output Current
SD1-2.5A-23	2	0.4kW	0.5HP	3.7A	2.5A
SD1-4.2A-23	2	0.75kW	1.0HP	5.0A	4.2A
SD1-7.5A-23	3	1.5kW	2.0HP	7.7A	7.5A
SD1-10A-23	3	2.2kW	3.0HP	11.0A	10.0A

Three Phase 380VAC					
Model	Frame Size	Output Power		Input Current	Output Current
SD1-2.5A-43	2	0.75kW	1.0HP	3.4A	2.5A
SD1-4.2A-43	2	1.5kW	2.0HP	5.0A	4.2A
SD1-5.5A-43	2	2.2kW	3.0HP	5.8A	5.5A
SD1-9.5A-43	3	4.0kW	5.5HP	13.5A	9.5A
SD1-14A-43	3	5.5kW	7.5HP	19.5A	14.0A
SD1-18.5A-43	4	7.5kW	10.0HP	25.0A	18.5A
SD1-25A-43	4	11.0kW	15.0HP	32.0A	25.0A
SD1-32A-43	4	15.0kW	20.0HP	40.0A	32.0A
SD1-38A-43	5	18.5kW	25.0HP	47.0A	38.0A
SD1-45A-43	5	22.0kW	30.0HP	51.0A	45.0A
SD1-60A-43	6	30.0kW	40.0HP	70.0A	60.0A
SD1-75A-43	6	37.0kW	50.0HP	80.0A	75.0A
SD1-92A-43	7	45.0kW	60.0HP	98.0A	92.0A
SD1-115A-43	7	55.0kW	75.0HP	128.0A	115.0A
SD1-150A-43	7	75.0kW	100.0HP	139.0A	150.0A
SD1-180A-43	8	90.0kW	125.0HP	168.0A	180.0A
SD1-215A-43	8	110.0kW	150.0HP	201.0A	215.0A

SD1 Accessories

Model	Description
SD1-KP	Remote Keypad
SD1-KP-CPY	Remote Keypad with Copy function
SD1-KP-MB	Keypad Mounting Bracket

SD1 Options & Ordering Information

SD1 - 2.5A - 21

- **SD1** — Series Name
- **2.5A** — Nominal Power (see Output Current)
- **21** — Input Voltage & Phase

11	110V Single Phase
21	220V Single Phase
23	220V Three Phase
43	380V Three Phase

SD1 Dimensions

Frame Size 1		
Height	Width	Depth
160mm (6¼")	80mm (3⅛")	123.5mm (4⅞")

Frame Size 2		
Height	Width	Depth
185mm (7¼")	80mm (3⅛")	140.5mm (5½")

Frame Size 3		
Height	Width	Depth
256mm (10¼")	146mm (5¾")	167mm (6⅝")

Frame Size 4		
Height	Width	Depth
320mm (12⅝")	170mm (6¾")	196.3mm (7¾")

Frame Size 5		
Height	Width	Depth
340.6mm (13⅜")	200mm (7⅞")	184.3mm (7¼")

Frame Size 6		
Height	Width	Depth
400mm (15¾")	250mm (9⅞")	202mm (8")

Frame Size 7		
Height	Width	Depth
560mm (22")	282mm (11⅛")	238mm (9⅜")

Frame Size 8		
Height	Width	Depth
554mm (21⅞")	338mm (13¼")	329.2mm (13")

Note: Imperial measurements tollerance ±¼"

SD1 Power & Control Connections

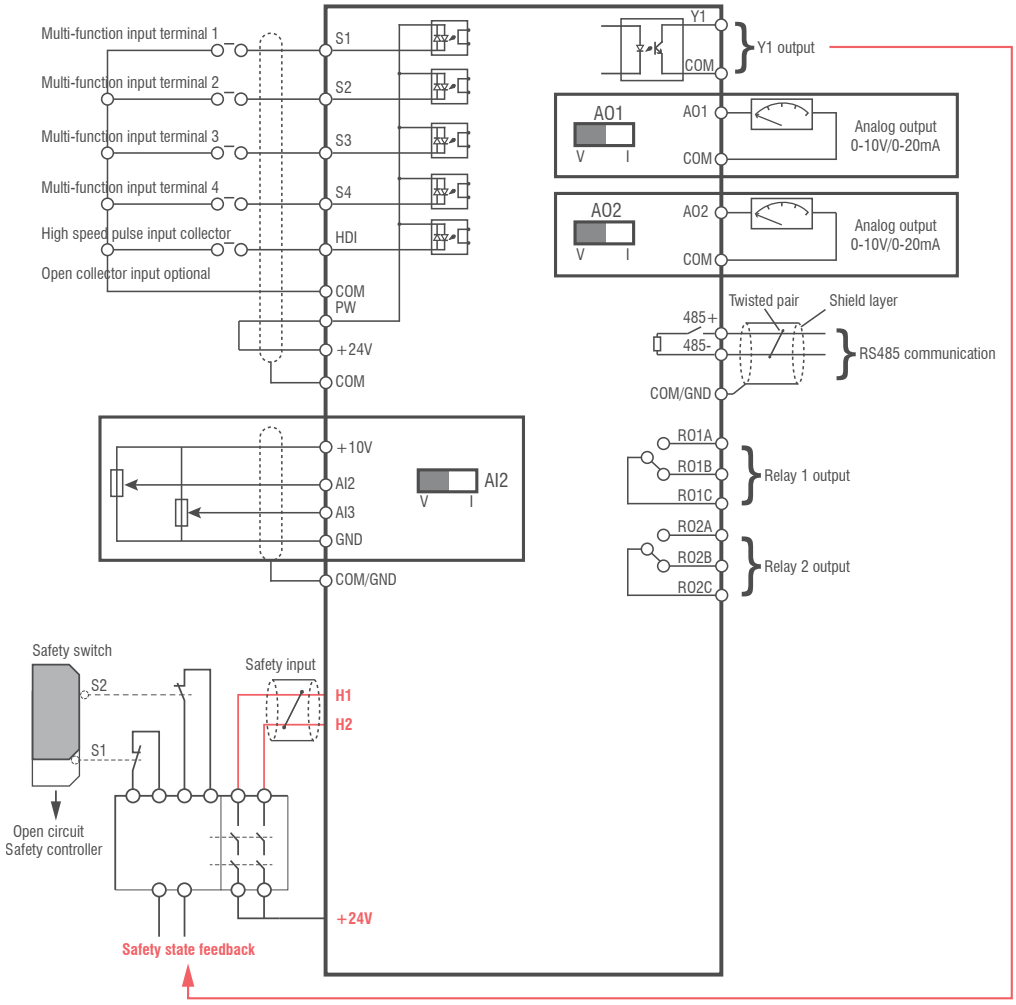

NOTE: This is a typical circuit which, depending on the rating is subject to change. Please check the user manual for more details.

SD1 Optional External EMC Filters

Single Phase 220Vac				
Model	**C3 Filter / Current**		**C2 Filter / Current**	
SD1-2.5A-21	SD1-RFC3-10	10A	SD1-RFC2-10	10A
SD1-4.2A-21	SD1-RFC3-10	10A	SD1-RFC2-10	10A
SD1-7.5A-21	SD1-RFC3-10	10A	SD1-RFC2-16	16A
SD1-10A-21	SD1-RFC3-10	10A	SD1-RFC2-16	16A

Three Phase 220Vac				
Model	**C3 Filter / Current**		**C2 Filter / Current**	
SD1-2.5A-23	SD1-RFC3-7	7A	SD1-RFC2-6	6A
SD1-4.2A-23	SD1-RFC3-7	7A	SD1-RFC2-6	6A
SD1-7.5A-23	Internal	-	SD1-RFC2-16	16A
SD1-10A-23	Internal	-	SD1-RFC2-16	16A
SD1-16A-23	Internal	-	SD1-RFC2-32	32A
SD1-20A-23	Internal	-	SD1-RFC2-32	32A
SD1-30A-23	Internal	-	SD1-RFC2-45	45A

Three Phase 400Vac				
Model	**C3 Filter / Current**		**C2 Filter / Current**	
SD1-2.5A-43	SD1-RFC3-7	7A	SD1-RFC2-6	6A
SD1-4.2A-43	SD1-RFC3-7	7A	SD1-RFC2-6	6A
SD1-5.5A-43	SD1-RFC3-7	7A	SD1-RFC2-6	6A
SD1-9.5A-43	Internal	-	SD1-RFC2-16	16A
SD1-14A-43	Internal	-	SD1-RFC2-16	16A
SD1-18.5A-43	Internal	-	SD1-RFC2-32	32A
SD1-25A-43	Internal	-	SD1-RFC2-32	32A

HD2

High performance, dual rated, torque vector inverters for AC motors

380/440V: 1.5kW-500kW (2HP-670HP)

The HD2 range of inverters offer unrivalled performance. Designed for controlling asynchronous AC induction motors and permanent magnet synchronous motors, the HD2 torque vector control range are packed full of features that you would usually expect to find on considerably higher specified inverters.

Utilising the most advanced vector control technology, the HD2 range delivers sensorless and closed loop vector control for both asynchronous and synchronous motors giving exceptional speed response and control. HD2 offers unparalleled reliability, environmental adaptability, high precision and stable performance - everything you have come to expect from an IMO inverter drive.

The HD2 also offers some significant advantages to the customer including a huge range of functions with simple operation, international communication protocols (Ethernet IP, Profinet, EtherCAT, etc.) along with Bluetooth and WiFi communication for programming.

- **IP20 HD2**: Three-phase (380/440V) 1.5kW-500kW (2HP-670HP)
- Torque Vector Control
- Integral ModbusRTU / RS485
- Bluetooth & WiFi Communication
- Multiple Communication Expansion Options
- Multiple I/O and 24V option cards
- Safe Torque Off (STO) as Standard
- Conformal Coating as Standard

2 YEAR WARRANTY

HD2 Hardware Features

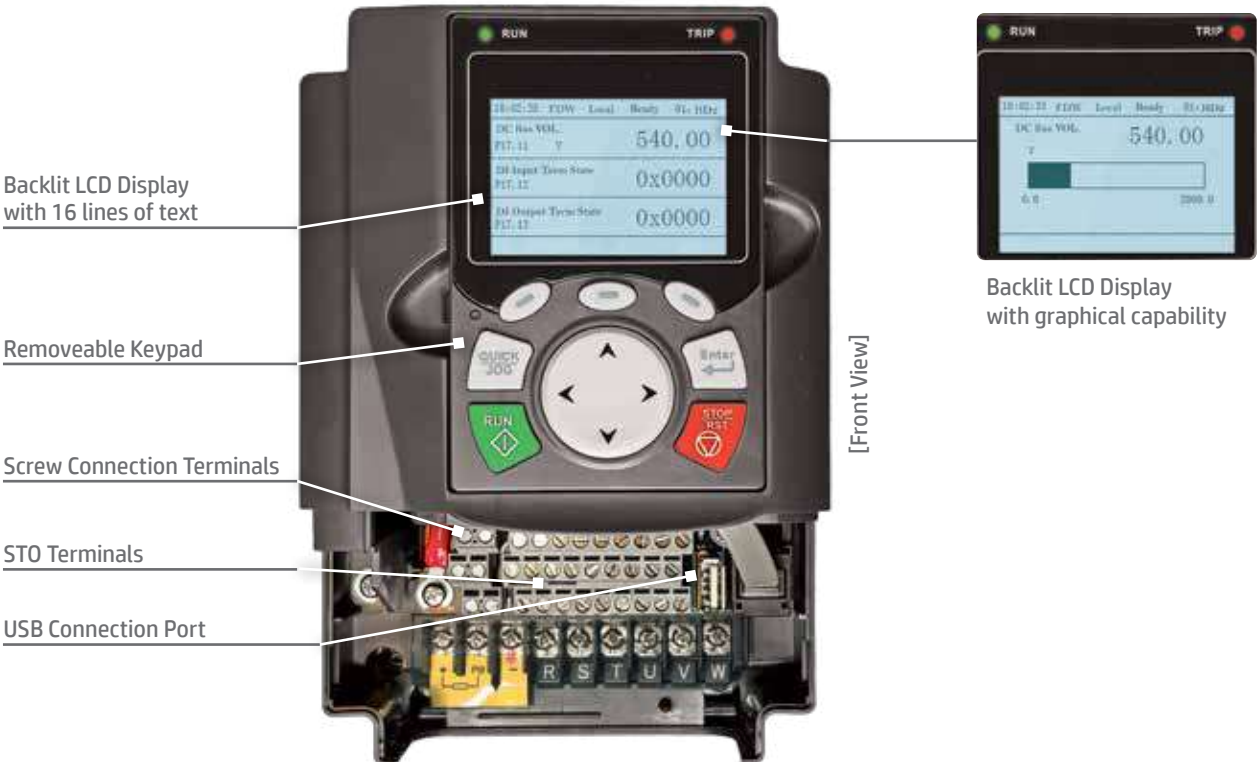

Setting High Standards

The level of functionality offered by the standard HD2 range sets the bar high for others to compete with. For example, the HD2 offers two sets of motor parameters which allow users to deploy one HD2 inverter to control different motors, which ultimately leads to cost savings. The LCD keypad provides up to 16 lines of text and includes detailed information of parameter function with user customisable display options, along with remote mounting options for the keypad.

Connected For Communications

Every model in the HD2 range offers communication capability. The connection is completed by way of twisted-pair to the dedicated RS-485 terminals found on the control terminal block using the Modbus-RTU protocol or using any of the many communication option cards for which models up to and including 5.5kW can use two options cards simultaneously, whilst models upward of 7.5kW can use three option cards.

New to this range are Bluetooth and WiFi wireless communication.

- Ethernet (proprietary) Card
- Modbus RTU/RS485 built in
- Profibus DP Card
- CANopen Card
- CAN master/slave Card
- Profinet Card
- Bluetooth Card
- WiFi Card
- PLC Option Cards
- I/O Expansion Card
- 6 Digital Inputs
- 2 Analogue Inputs
- 1 Analogue Output
- 2 Relay Outputs
- USB Port for firmware updates
- Ethernet IP Card
- EtherCAT Card
- Modbus TCP Card

HD2 Application Examples

With the array of advanced features and filter options, the HD2 is suited for use in virtually any application, whether it be industrial, commercial or domestic. The following are examples of, but not limited to, the type of application where the HD2 can be employed:-

Heavy Duty Machinery

- Oil
- Mining
- Aggregates

Hoist Applications

- RTG Cranes
- Elevators & Lifts
- Material Handling

Conveyor Applications

- Metals
- Logistics
- Food Machinery

Pump & Fan Applications

- Fans
- HVAC
- Pumps
- BMS Systems
- Air Compression

The HD2 offers unparalleled reliability, environmenal adaptability, high precision and stable performance - everything you have come to expect from an IMO inverter drive.

HD2 Terminal Layout

Terminal	Description
RO1A / RO2A	Relay Output N/O
RO1B / RO2B	Relay Output N/C
RO1C / RO2C	Relay Output Common
PE	Ground
PW	Input for external 24VDC supply
+24V	+24V for digital inputs
+10V	+10V for analog inputs
COM	0V common for digital inputs
CME	0V common for digital output
GND	0V common for analog input
H1	STO input 1
H2	STO input 2
S1 - S4	Digital input
HD1A / HD1B	Digital input / pulse input
AI1 / AI2	Analog input
AO1	Analog output
Y1	Digital output
HDO	Pulse output
485+	Comms +
485-	Comms -
485G	Comms ground

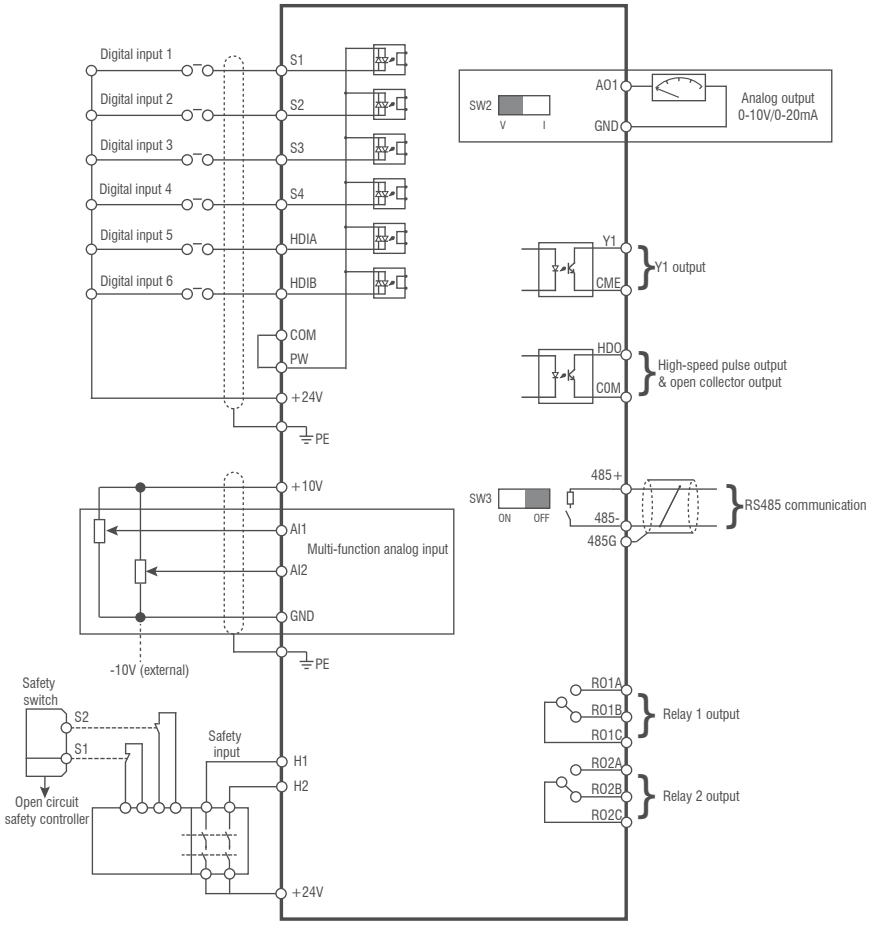

HD2 Technical Specifications

Function Description		Specification
Power Input	Input Voltage (V)	AC 3PH Rated Voltage - 460V;
	Allowable Voltage Fluctuation	-15% to +10%
	Input Frequency (Hz)	50Hz/60Hz, allowable range: 47 to 63Hz
Power Output	Output Voltage (V)	0 to Input voltage
	Output Frequency (Hz)	0 to 400Hz
Technical Control Performance	Control Mode	SVPWM control, SVC, VC
	Motor Type	Asynchronous motor, permanent-magnet synchronous motor
	Speed Regulation Ratio	Asynchronous motor 1:200 (SVC); Synchronous motor1:20 (SVC); 1:1000 (VC)
	Speed Control Precision	±0.2% (SVC), ±0.02% (VC)
	Speed Fluctuation	±0.3% (SVC)
	Torque Response	<20ms (SVC), <10ms (VC)
	Torque Control Precision	10% (SVC), 5% (VC)
	Starting Torque	Asynchronous motor: 0.25Hz / 150% (SVC), Synchronous motor: 2.5Hz / 150% (SVC), 0Hz / 200% (VC)
	Overload Capacity	Constant Torque: 150%: 1 min; 180%: 10s; 200%: 1s, Variable Torque: 120%: 1 min; 150%: 10s; 180%: 1s
Running Control Performance	Frequency Setup Mode	Digital, analog, pulse frequency, multi-step speed running, simple PLC, PID, Modbus & multiple Ethernet-based commuication
	Auto. Voltage Regulation Function	Keep the output voltage constant when grid voltage changes
	Fault Protection Function	Over 30 fault protection functions: overcurrent, overvoltage, undervoltage, over-temperature, phase loss & overload, etc.
	Speed Tracking Restart	Realise impact-free starting of the motor in rotating
Peripheral Interface	Analog Input	2 (AI1: 0-10V/4-20mA; AI2: -10V to +10V)
	Analog Output	1 (AO1: 0-10V/4-20mA)
	Digital Input	4x DI, 2x High Speed Inputs
	Digital Output	1x DO, 1x Pulse Output
	Relay Output	2x programmable relay output, NO/NC contact
	Communication Interface	1x RS485 (non-isolated), 1x USB
	STO Input	2x redundant input
Other	Installation Mode	Wall mounting, Flange mounting, Floor mounting
	Temperature	-10°C to +50°C (Derating is required if the ambient temperature exceeds 40°C)
	Protection Level	IP20
	Cooling Mode	Forced air cooling
	Braking Unit	15kW or below built-in (220V models); 30kW or below built-in (460V models)
	STO Level	SIL2
	EMC Filter	All models fulfill the requirements of IEC61800-3 C3, up to 30m cable length shielded

HD2 Options & Ordering Information

HD2 - 75A - 43

Series

HD2 Inverter	**HD2**

Input 380/440V Three Phase

Output Power kW (HP)

1.5kW	(2HP)	**3.7A**	90kW	(125HP)	**180A**
2.2kW	(3HP)	**5A**	110kW	(150HP)	**215A**
4.0kW	(5.5HP)	**9.5A**	132kW	(175HP)	**260A**
5.5kW	(7.5HP)	**14A**	160kW	(215HP)	**305A**
7.5kW	(10HP)	**18.5A**	185kW	(250HP)	**340A**
11kW	(15HP)	**25A**	200kW	(270HP)	**380A**
15kW	(20HP)	**32A**	220kW	(300HP)	**425A**
18.5kW	(25HP)	**38A**	250kW	(335HP)	**480A**
22kW	(30HP)	**45A**	280kW	(375HP)	**530A**
30kW	(40HP)	**60A**	315kW	(420HP)	**600A**
37kW	(50HP)	**75A**	355kW	(475HP)	**650A**
45kW	(60HP)	**92A**	400kW	(535HP)	**720A**
55kW	(75HP)	**115A**	450kW	(600HP)	**820A**
75kW	(90HP)	**150A**	500kW	(670HP)	**860A**

HD2 Ratings & Specifications

	Model	Rated Power kW (HP)	Carrier Frequency (kHz)	Input Current (A)	Output Current (A)	Contactor (A)	Fuse/ MCCB (A)	Dimensions		
								Width	Height	Depth
Three Phase 440V	HD2-3.7A-43	1.5 (2)	8	5	3.7	10	17.4/16	126	186	184.4
	HD2-5A-43	2.2 (3)	8	5.8	5	10	17.4/16	126	186	185
	HD2-9.5A-43	4 (5.5)	8	13.5	9.5	16	30/25	126	186	200.9
	HD2-14A-43	5.5 (7.5)	8	19.5	14	16	45/25	126	186	200.9
	HD2-18.5A-43	7.5 (10)	8	25	18.5	25	60/40	146	256	191.9
	HD2-25A-43	11 (15)	8	32	25	32	78/63	170	320	219.2
	HD2-32A-43	15 (20)	4	40	32	50	105/63	170	320	219.2
	HD2-38A-43	18.5 (25)	4	47	38	63	114/100	200	340.6	207.2
	HD2-45A-43	22 (30)	4	56	45	80	138/100	200	340.6	207.2
	HD2-60A-43	30 (40)	4	70	60	95	186/125	250	400	222.4
	HD2-75A-43	37 (50)	4	80	75	120	228/160	250	400	222.4
	HD2-92A-43	45 (60)	4	94	92	135	270/200	282	560	257.1
	HD2-115A-43	55 (75)	4	128	115	170	315/200	282	560	257.1
	HD2-150A-43	75 (100)	2	160	150	230	420/250	282	560	257.1
	HD2-180A-43	90 (125)	2	190	180	280	480/315	338	554	329.2
	HD2-215A-43	110 (150)	2	225	215	315	630/400	338	554	329.2
	HD2-260A-43	132 (175)	2	265	260	380	720/400	500	870	360
	HD2-305A-43	160 (215)	2	310	305	450	870/630	500	870	360
	HD2-340A-43	185 (250)	2	345	340	580	1110/630	500	870	360
	HD2-380A-43	200 (270)	2	385	380	580	1110/630	500	870	360
	HD2-425A-43	220 (300)	2	430	425	630	1230/800	680	960	379.5
	HD2-480A-43	250 (335)	2	485	480	700	1380/800	680	960	379.5
	HD2-530A-43	280 (375)	2	545	530	780	1500/1000	680	960	379.5
	HD2-600A-43	315 (420)	2	610	600	900	1740/1200	680	960	379.5
	HD2-650A-43	355 (475)	2	625	650	960	1860/1280	620	1700	560
	HD2-720A-43	400 (535)	2	715	720	1035	2010/1380	620	1700	560
	HD2-820A-43	450 (600)	2	840	820	1222	2445/1630	620	1700	560
	HD2-860A-43	500 (670)	2	890	860	1290	2505/1720	620	1700	560

NOTE: Please contact IMO for dual rated and UL approved HD2 inverters.

HD2 Dimensions (mm) & Frame Sizes

Model	Width	Height	Depth	Frame Size
HD2-3.7A-43	126	186	184.4	1
HD2-5A-43	126	186	185	
HD2-9.5A-43	126	186	200.9	2
HD2-14A-43	126	186	200.9	
HD2-18.5A-43	146	256	191.9	3
HD2-25A-43	170	320	219.2	4
HD2-32A-43	170	320	219.2	
HD2-38A-43	200	340.6	207.2	5
HD2-45A-43	200	340.6	207.2	
HD2-60A-43	250	400	222.4	6
HD2-75A-43	250	400	222.4	
HD2-92A-43	282	560	257.1	7
HD2-115A-43	282	560	257.1	
HD2-150A-43	282	560	257.1	

Model	Width	Height	Depth	Frame Size
HD2-180A-43	338	554	329.2	8
HD2-215A-43	338	554	329.2	
HD2-260A-43	500	870	360	9
HD2-305A-43	500	870	360	
HD2-340A-43	500	870	360	
HD2-380A-43	500	870	360	
HD2-425A-43	680	960	379.5	10
HD2-480A-43	680	960	379.5	
HD2-530A-43	680	960	379.5	
HD2-600A-43	680	960	379.5	
HD2-650A-43	620	1700	560	11
HD2-720A-43	620	1700	560	
HD2-820A-43	620	1700	560	
HD2-860A-43	620	1700	560	

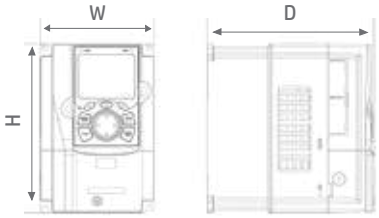

Frame Size 1

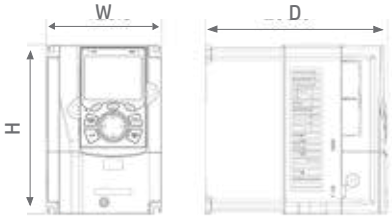

Frame Size 2

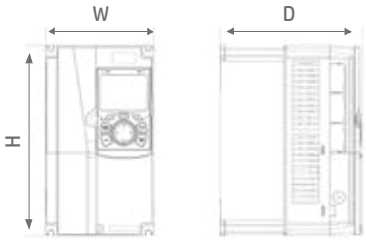

Frame Size 3

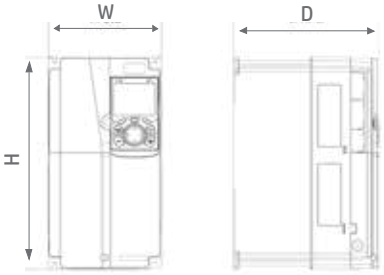

Frame Size 4

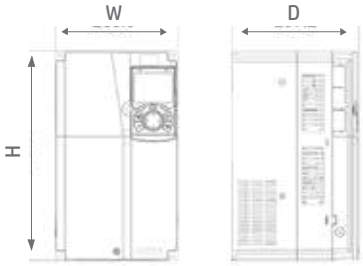

Frame Size 5

Frame Size 6

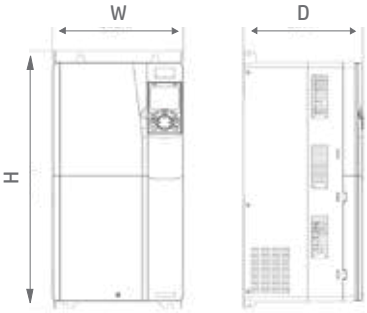

Frame Size 7

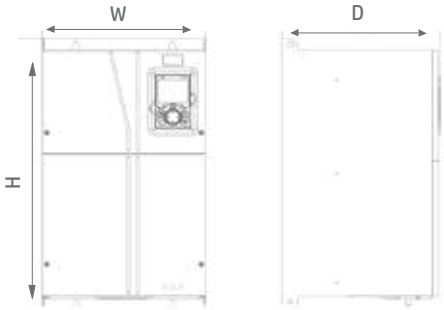

Frame Size 8

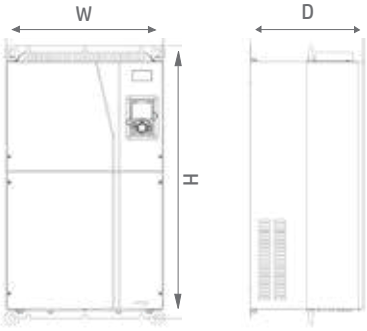

Frame Size 9

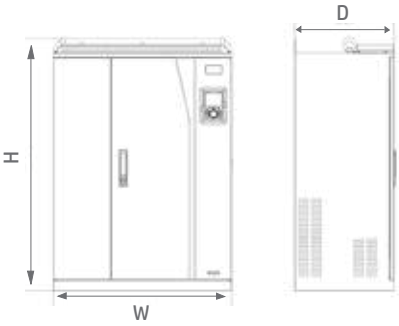

Frame Size 10

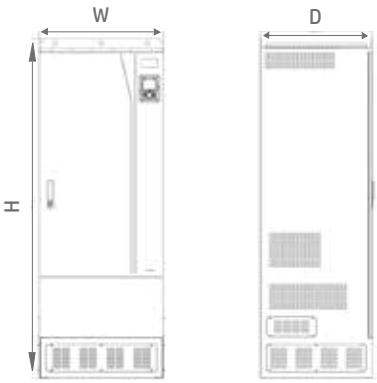

Frame Size 11

HD2 / HD2IP Expansion Card Selection

Expansion Card Type	Part Number	Part Description
I/O Card	HD2-E-IO	IO Expansion Card (4DI, 1 DO, 1 AI, 1 AO, 2RO)
	HD2-E-IO2	IO Expansion Card (1 PT100, 1 PT1000, 4 DI, 2 RO)
PLC Card	HD2-E-PLC	Programmable Expansion Card (CODESYS)
Communication Card	HD2-E-BTP	Bluetooth Communication Card (Internal Antenna)
	HD2-E-BTM	Bluetooth Communication Card (External Antenna)
	HD2-E-ENET	Ethernet Communication Card
	HD2-E-EIP	Ethernet/IP Communication Card
	HD2-E-ECAT	EtherCAT Communication Card
	HD2-E-WFP	WiFi Communication Card (Internal Antenna)
	HD2-E-WFM	WiFi Communication Card (External Antenna)
	HD2-E-COP	CANopen Communication Card
	HD2-E-CAN	CAN Master-Slave Communication Card
	HD2-E-PDP	PROFIBUS-DP Comunication Card
	HD2-E-PRF	PROFINET Communication Card
	HD2-E-MTCP	Modbus TCP Communication Card
PG Card	HD2-E-PGIM	Multi-Function Incremental PG Card
	HD2-E-PGIM-24	24V Multi-Function Incremental PG Card
	HD2-E-PGI	5V Differential PG Card
	HD2-E-PGR	Rotary Transformer PG Card
Power Supply Card	HD2-E-APS	24V DC Aux. Power Supply Card
Accessories	HD2-KP	LCD Multi-function keypad
	HD2-KP-MB	Keypad mounting bracket

HD2-E-IO

HD2-E-PDP

HD2 Accessories

Inverter	Input Reactor	DC Reactor	Output Reactor	Braking unit
HD2-3.7A-43	ACLC-1.5-4	DCLC-004-4	OCLC-1.5-4	Integral
HD2-5A-43	ACLC-2.2-4	DCLC-7R5-4	OCLC-2.2-4	Integral
HD2-9.5A-43	ACLC-4.0-4	DCLC-7R5-4	OCLC-4.0-4	Integral
HD2-14A-43	ACLC-5.5-4	DCLC-015-4	OCLC-5.5-4	Integral
HD2-18.5A-43	ACLC-7.5-4	DCLC-015-4	OCLC-7.5-4	Integral
HD2-25A-43	ACLC-11-4	DCLC-018-4	OCLC-11-4	Integral
HD2-32A-43	ACLC-15-4	DCLC-022-4	OCLC-15-4	Integral
HD2-38A-43	ACLC-18-4	DCLC-030-4	OCLC-18-4	Integral
HD2-45A-43	ACLC-22-4	DCLC-037-4	OCLC-22-4	Integral
HD2-60A-43	ACLC-37-4	DCLC-045-4	OCLC-37-4	Integral
HD2-75A-43	ACLC-37-4	DCLC-055-4	OCLC-37-4	Integral
HD2-92A-43	ACLC-45-4	DCLC-055-4	OCLC-45-4	DBU45/75-4
HD2-115A-43	ACLC-55-4	DCLC-075-4	OCLC-55-4	DBU45/75-4
HD2-150A-43	ACLC-75-4	DCLC-090-4	OCLC-75-4	DBU45/75-4
HD2-180A-43	ACLC-110-4	DCLC-132-4	OCLC-110-4	DBU90/110-4
HD2-215A-43	ACLC-110-4	DCLC-132-4	OCLC-110-4	DBU90/110-4
HD2-260A-43	ACLC-160-4	DCLC-132-4	OCLC-200-4	DBU132-4
HD2-305A-43	ACLC-160-4	DCLC-160-4	OCLC-200-4	DBU160/200-4
HD2-340A-43	ACLC-200-4	DCLC-200-4	OCLC-200-4	DBU160/200-4
HD2-380A-43	ACLC-200-4	DCLC-220-4	OCLC-200-4	DBU160/200-4
HD2-425A-43	Integral	DCLC-280-4	OCLC-280-4	DBU220/250-4
HD2-480A-43	Integral	DCLC-280-4	OCLC-280-4	DBU220/250-4
HD2-530A-43	Integral	DCLC-280-4	OCLC-280-4	DBU160/200-4 (x2)
HD2-600A-43	Integral	DCLC-315-4	OCLC-350-4	DBU160/200-4 (x2)
HD2-650A-43	Integral	DCLC-400-4	OCLC-350-4	DBU160/200-4 (x2)
HD2-720A-43	Integral	DCLC-400-4	OCLC-400-4	DBU160/200-4 (x2)
HD2-820A-43	Integral	DCLC-500-4	OCLC-500-4	DBU160/200-4 (x2)
HD2-860A-43	Integral	DCLC-500-4	OCLC-500-4	DBU220/250-4 (x2)

HD2-E-WFP

HD2-E-PGI

HD2IP

High protection, multi-function torque vector inverters for AC Motors

380/440V: 4kW-110kW (5.5HP-148HP)

HD2IP features IP55 protection rating

The HD2IP series of IP55 rated inverters is our latest high protection, multi function torque vector inverter for AC motors. The IP55 protection rating provides the best protection experience, making it ideal for both indoor and outdoor applications. The HD2IP also incorporates features such as ease of use, excellent performance, high scalability and wide application usage.

An integrated AC isolator provides convenience and security for machine control and added safety.

- IP55 Protection Rating
- AC Isolator for Safe Control
- Isolated Air Duct
- Sectional cover design makes wiring simple
- Strong scalability: supports up to 3 expansion cards at the same time
- Three year warranty as standard

HD2IP Options & Ordering Information

HD2IP - 75A - 43

Series

HD2IP Inverter Drive (IP55 Rated)	**HD2IP**

Input 380/440V Three Phase

Output Power kW

4kW	**9.5A**	30kW	**60A**
5.5kW	**14A**	37kW	**75A**
7.5kW	**18.5A**	45kW	**92A**
11kW	**25A**	55kW	**115A**
15kW	**32A**	75kW	**150A**
18.5kW	**38A**	90kW	**180A**
22kW	**45A**	110kW	**215A**

HD2IP Ratings & Specifications

Model	Constant Torque				Variable Torque				Frame Size
	Power (kW)	Input Current (A)	Output Current (A)	Carrier (kHz)	Power (kW)	Input Current (A)	Output Current (A)	Carrier (kHz)	
HD2IP-9.5A-43	4	13.5	9.5	8	5.5	19.5	12.5	4	1
HD2IP-14A-43	5.5	19.5	14	8	7.5	23	17	4	
HD2IP-18.5A-43	7.5	25	18.5	8	11	30	23	4	2
HD2IP-25A-43	11	32	25	8	15	40	32	4	
HD2IP-32A-43	15	40	32	4	18.5	45	38	2	
HD2IP-38A-43	18.5	45	38	4	22	51	45	2	3
HD2IP-45A-43	22	51	45	4	30	64	60	2	
HD2IP-60A-43	30	64	60	4	37	80	75	2	4
HD2IP-75A-43	37	80	75	4	45	98	92	2	
HD2IP-92A-43	45	98	92	4	55	128	115	2	5
HD2IP-115A-43	55	128	115	4	75	139	150	2	
HD2IP-150A-43	75	139	150	2	90	168	170	2	6
HD2IP-180A-43	90	168	180	2	110	201	215	2	
HD2IP-215A-43	110	201	215	2	-	-	-	-	

HD2IP Weight & Dimensions

Frame Size	Power (kW)	Net Weight (kg)	Gross Weight (kg)	Dimensions (mm)
1	4 - 5.5	7	8.5	196 x 403 x 260.5
2	7.5 - 15	13	15.4	223 x 475 x 289.4
3	18.5 - 22	21	23.6	274 x 522 x 279.5
4	30 - 37	26.5	29.5	318 x 587 x 290
5	45 - 55	48.2	52	338 x 800 x 336.7
6	75 - 110	64	82.8	370 x 788 x 380

HD2IP Technical Specifications

Function Description		Specification
Power Input	Input Voltage (V)	3PH 380V (-15%) to 440V (+10%)
	Input Frequency (Hz)	50Hz/60Hz, allowable range: 47 to 63Hz
Power Output	Output Voltage (V)	0 to Input voltage
	Output Frequency (Hz)	0 to 400Hz
Technical Control Performance	Control Mode	SVPWM control, SVC, VC
	Motor Type	Asynchronous motor, permanent-magnet synchronous motor
	Speed Regulation Ratio	Asynchronous motor 1:200 (SVC); Synchronous motor1:20 (SVC); 1:1000 (VC)
	Speed Control Precision	±0.2% (SVC), ±0.02% (VC)
	Speed Fluctuation	±0.3 (SVC)
	Torque Response	<20ms (SVC), <10ms (VC)
	Torque Control Precision	10% (SVC), 5% (VC)
	Starting Torque	Asynchronous motor: 0.25Hz / 150% (SVC) Synchronous motor: 2.5Hz / 150% (SVC) 0Hz / 200% (VC)
	Overload Capacity	Constant Torque: 150%: 1 min; 180%:10s; 200%: 1s Variable Torque: 120%: 1 min
Running Control Performance	Frequency Setup Mode	Digital, analog, pulse frequency, multi-step speed running, simple PLC, PID, Modbus communication, PROFIBUS communication, etc. Realize switch-over between the set combination and the set channel
	Automatic Voltage Regulation Function	Keep the output voltage constant when grid voltage changes
	Fault Protection Function	Provide over 30 kinds of fault protection functions: overcurrent, overvoltage, undervoltage, over-temperature, phase loss and overload, etc.
	Speed Tracking Restart	Realise impact-free starting of the motor in rotating
Peripheral Interface	Analog Input	2 (AI1: 0-10V/4-20mA; AI2: -10V to +10V)
	Analog Output	1 (AO1: 0-10V/4-20mA)
	Digital Input	4x DI, 2x High Speed Inputs
	Digital Output	1x DO, 1x Pulse Output
	Relay Output	2x programmable relay output, NO/NC contact
	Communication Interface	1x RS485 (non-isolated), 1x USB
	STO Input	2x redundant input
Optional Cards*	Expansion Interface	Maximum 3 expansion interfaces: SLOT1, SLOT2, SLOT3
	Expansion I/O Card	4x DI, 1x AI, 1x AO, 1x DO, 2x RO, PT100, PT1000
	Communication Card	Bluetooth Communication Card (Internal Antenna)
		Bluetooth Communication Card (External Antenna)
		Ethernet Communication Card
		Ethernet/IP Communication Card
		EtherCAT Communication Card
		WiFi Communication Card (Internal Antenna)
		WiFi Communication Card (External Antenna)
		CANopen Communication Card
		CAN Master-Slave Communication Card
		PROFIBUS-DP Comunication Card
		PROFINET Communication Card
		Modbus TCP Communication Card
	PG Card	Multi-Function Incremental PG Card
		24V Multi-Function Incremental PG Card
		5V Differential PG Card
		Rotary Transformer PG Card
	PLC Card	Programmable Expansion Card (CODESYS)
	Power Supply Card	24V DC Aux. Power Supply Card
Other	Installation Mode	Wall mounting, Flange mounting
	Temperature	-10°C to +50°C (Derating is required if the ambient temperature exceeds 40°C)
	Protection Level	IP55
	Cooling Mode	Forced air cooling
	Braking Unit	37kW or below: standard built-in
	STO Level	SIL2
	EMC Filter	380V models fulfill the requirements of IEC61800-3 C3, up to 30m cable length shielded

* See Expansion Card Selection table under HD2

HD2IP Control Connections

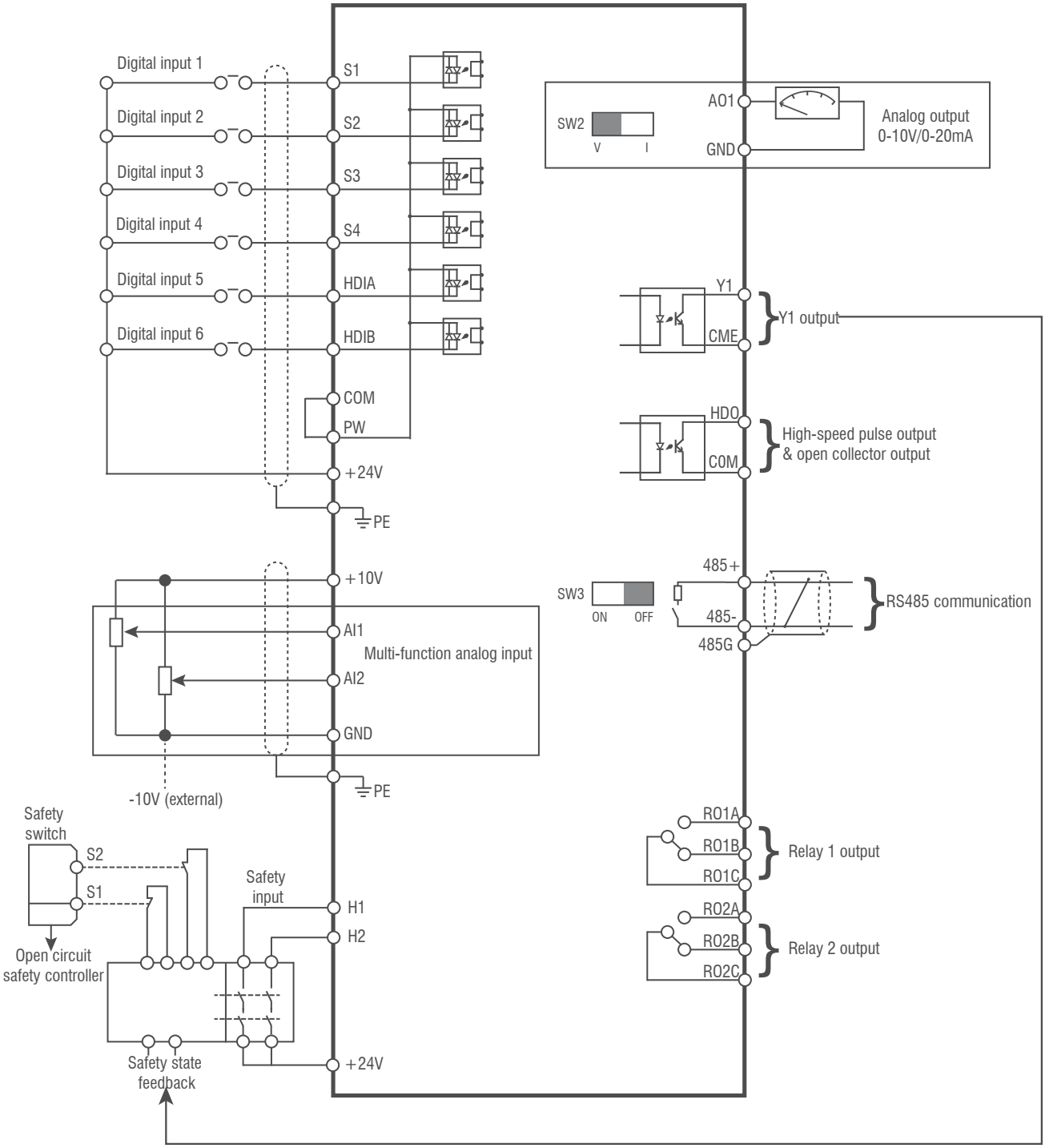

IMO Worldwide Offices

IMO Precision Controls Limited
The Interchange
Frobisher Way
Hatfield, Herts AL10 9TG
United Kingdom

Tel: 01707 414 444

Email: imo@imopc.com
Web: www.imopc.com

IMO Jeambrun Automation SAS
Parc de la Broye
14 rue du Chaufour
59710 ENNEVELIN
France

Tel: 0800 912 712 (nº gratuit)

Email: imo-fr@imopc.com
Web: www.imojeambrun.fr

IMO Automazione
Via Belfiore 10,
50144 Firenze (FI)
Italia

Tel: 800 930 872 (toll free)

Email: imo-it@imopc.com
Web: www.imopc.it

IMO Canada
1B-701 Rossland Road East
Suite #608
Whitby, Ontario L1N 9K3
Canada

Tel: 416 639 0709

Email: sales-ca@imopc.com
Web: www.imopc.com

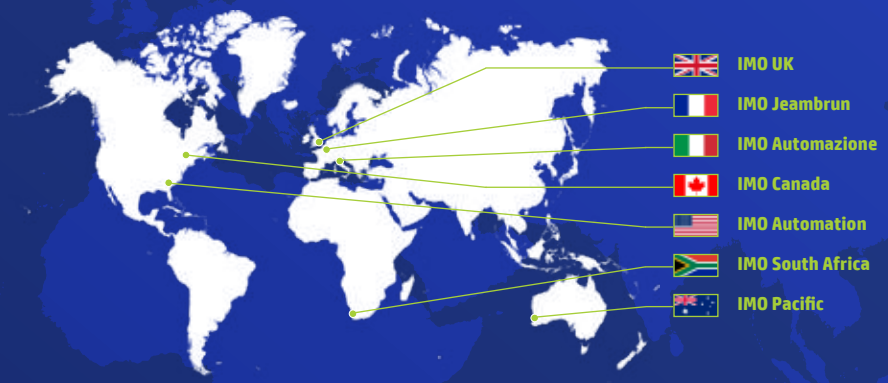

IMO Automation LLC
Suite 112,
5910 Shiloh Road East
Alpharetta, GA 30005
USA

Tel: 404 476 8810

Email: sales-na@imopc.com
Web: www.imoautomation.com

IMO South Africa (Pty) Ltd
Unit 5 Osdam Business Park
Columbus Crescent, Rivergate
Parklands, Cape Town 7441
South Africa

Tel: 021 551 1787
Fax: 021 555 0676
Email: info@imopc.co.za
Web: www.imopc.co.za

IMO Pacific Pty Ltd
Unit 9, Dillington Pass
Landsdale
Perth WA 6065
Australia

Tel: 1300 34 21 31

Email: sales@imopacific.com.au
Web: www.imopacific.com.au

ISO 9001 QUALITY MANAGEMENT
UKAS MANAGEMENT SYSTEMS 0015

LinkedIn
Connect with us and follow IMO Precision Controls for the latest news, views and reviews

QR CODE SCAN ME

Errors and omissions excepted. Subject to change without notice. Information correct at time of print.

CAT-SDHDRANGE-0922v2