5. PLANS ELECTRIQUES

TEC_INVMM1_230AC

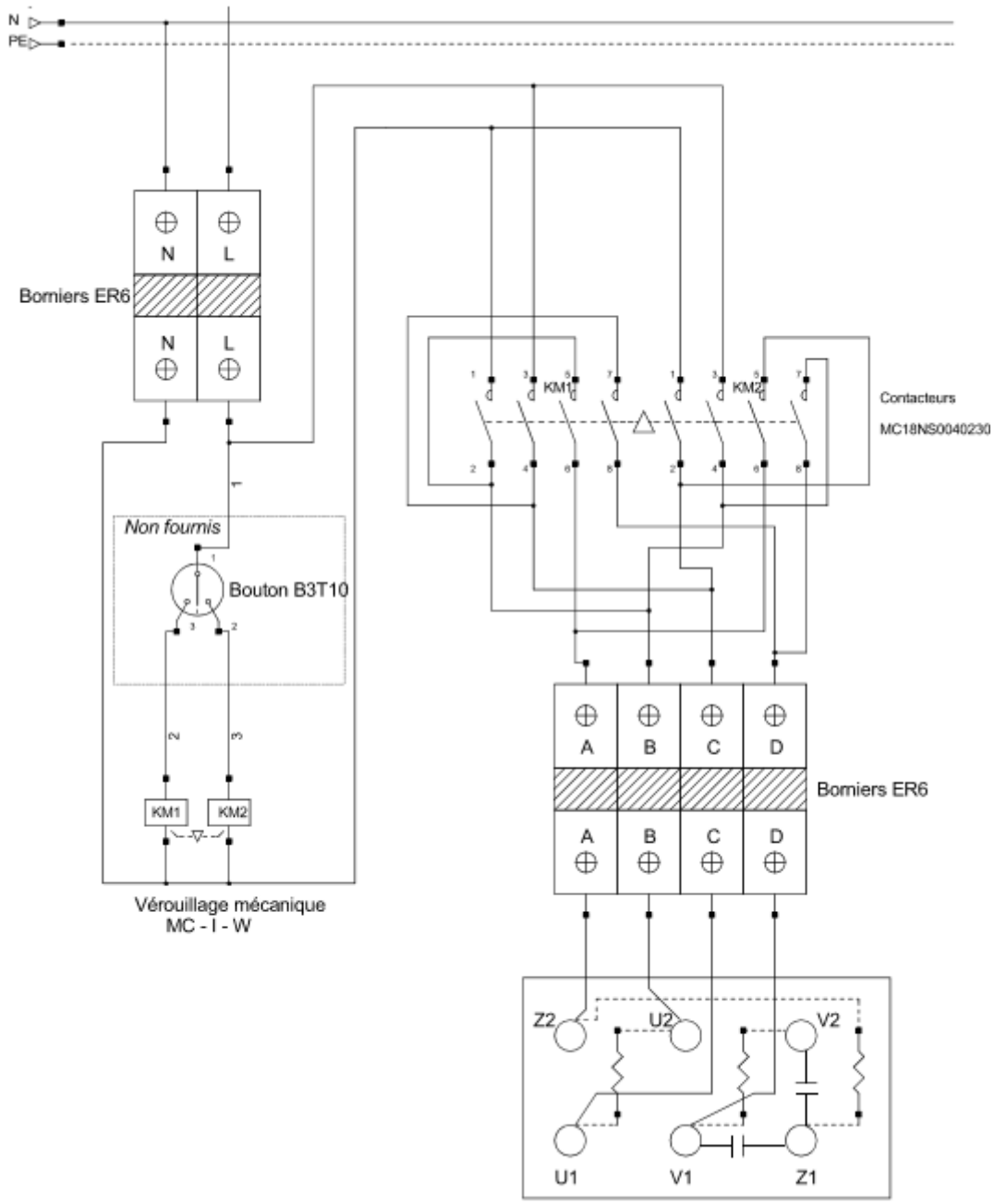
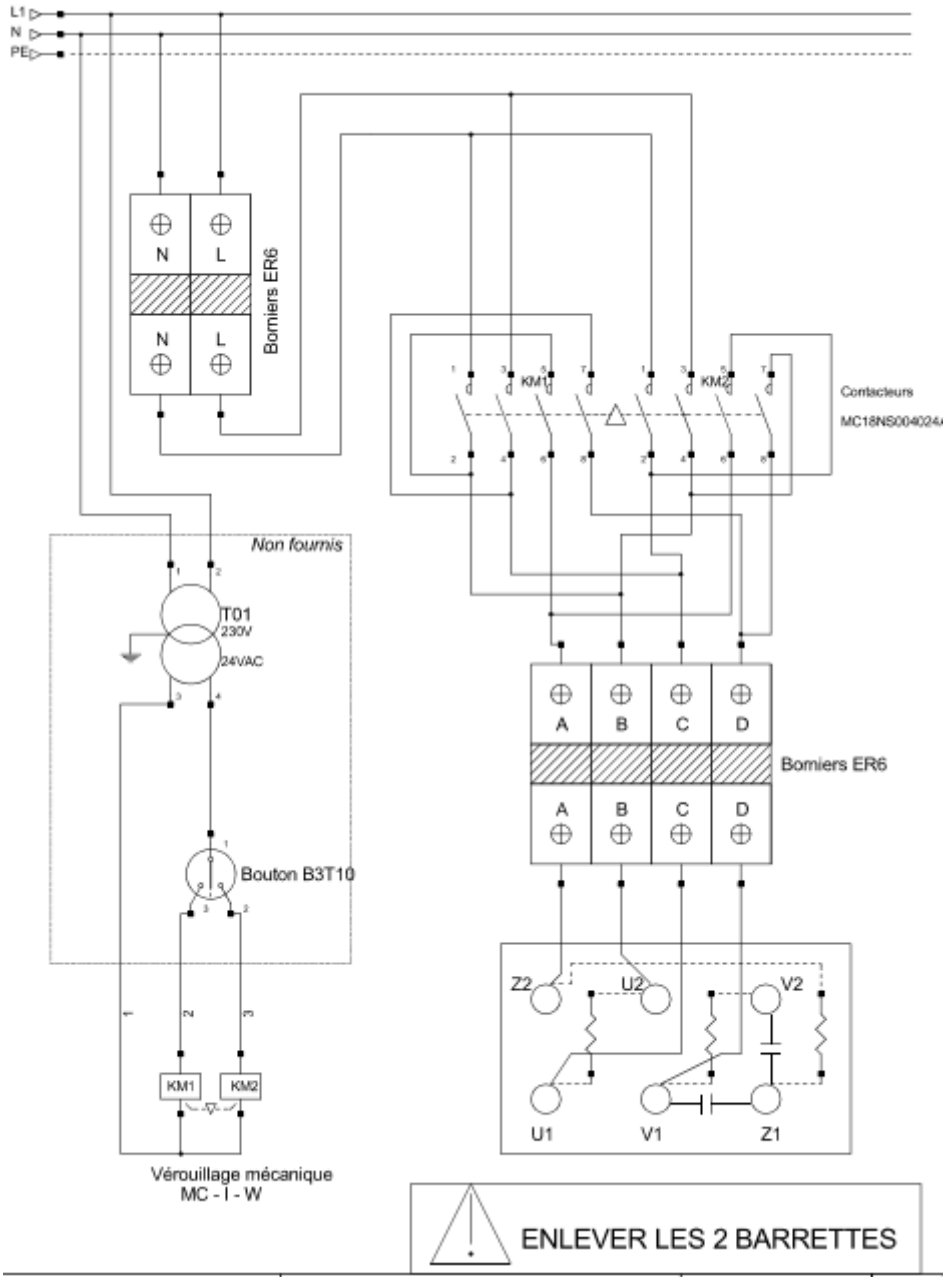
TEC_INVMM1_24AC