TKB48C..

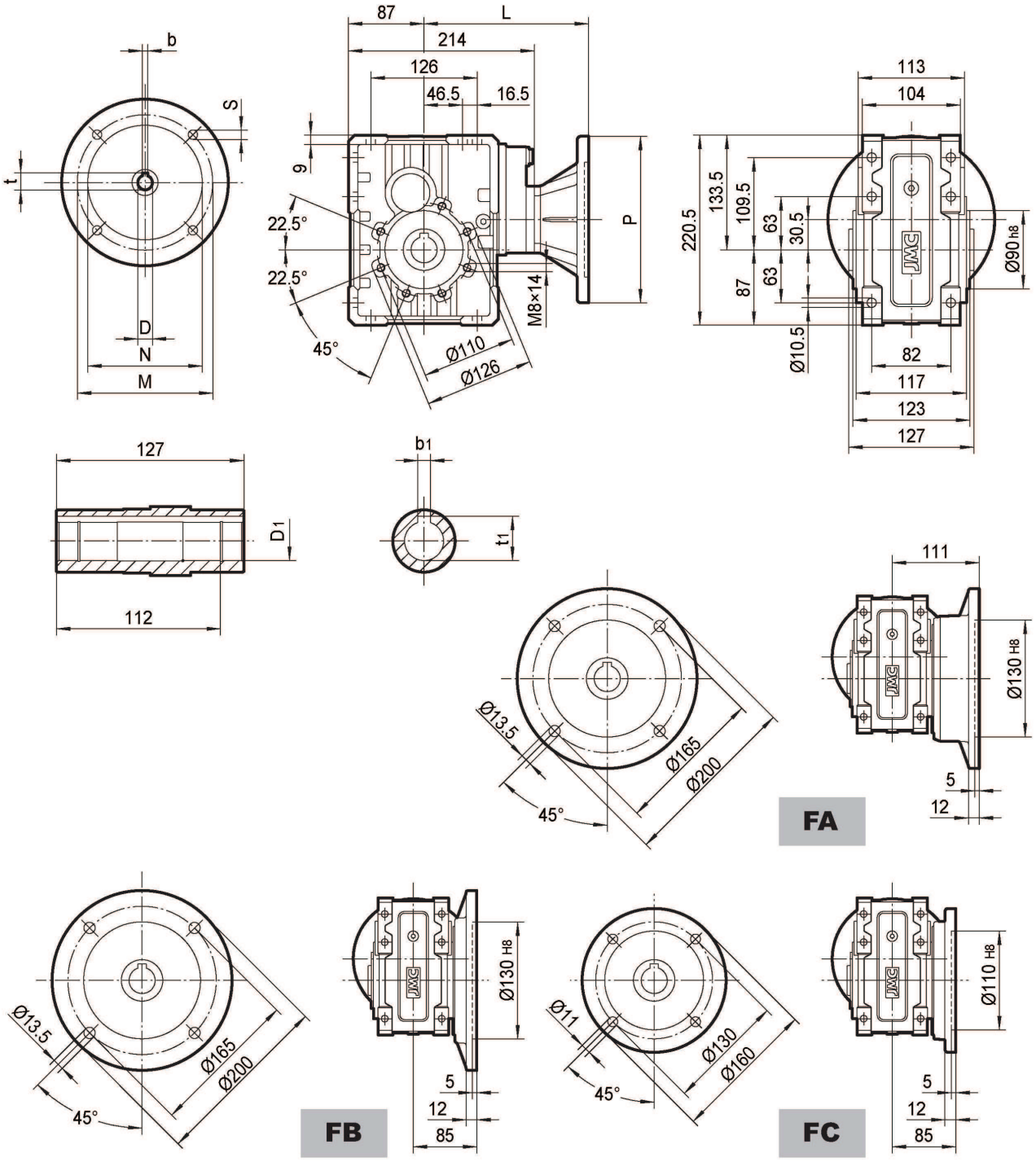

IEC	D_{E8}	b	t	P	M	N	S	T	L	$D1_{H8}$	b1	t1
63B5	11	4	12.8	140	115	95	9	4	179	28 *	8 *	31.3 *
71B5	14	5	16.3	160	130	110	9	4	186	30	8	33.3
80B5	19	6	21.8	200	165	130	11	4	206	35*	10*	38.3*
80B14	19	6	21.8	120	100	80	7	4	206	* Only on request		
90B5	24	8	27.3	200	165	130	11	4	206			
90B14	24	8	27.3	140	115	95	9	4	206			

Weight without motor
≈ 10.8 kg